REVISIONS		
ISS	ZONE	DESCRIPTION\PER REQUEST\DATE

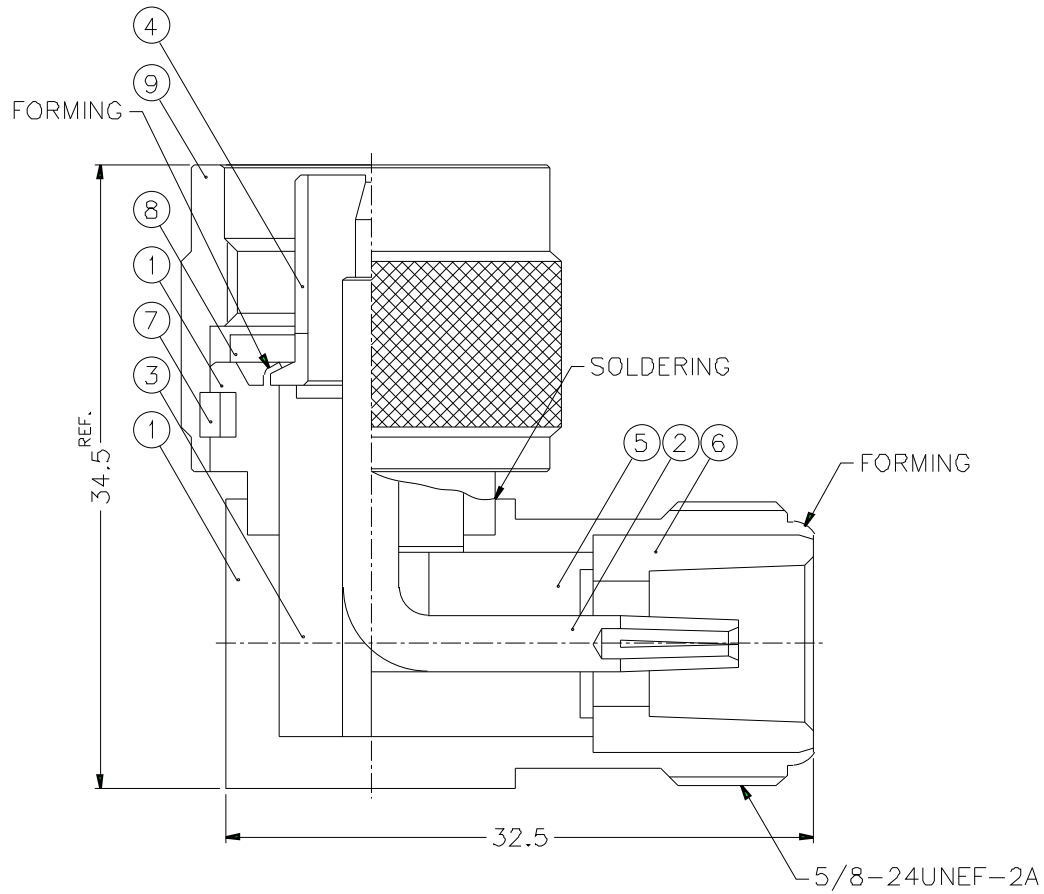

*1. SHELL MUST SHOW NO SIGNS OF SEPARATION FROM BODY WHEN A 36-44 IN.-LBf TORQUE IS APPLIED FOR 10 SECONDS.
2. CONTACT BODY TO BE TESTED BY APPLYING 8 IN.-LBf MIN. TORQUE FOR 10 SECONDS, NO EVIDENCE OF ROTATION SHALL EXIST.
3. RETURN LOSS 22dB MIN. AT 2GHz~3GHz

NOTES: FINISH (PLATING THICKNESS IN MICRO-INCHES)
1. BRASS PER QQ-B-626
2 NICKEL PL. 100 MIN. THICK OVER COPPER STRIKE
3 PHOSPHOR BRONZE PER QQ-B-750
4 GOLD PL. 3 MIN THICK OVER NICKEL PL. 100 MIN THICK OVER COPPER STRIKE
5 TEFLON MIL-P-19468

NO.	DESCRIPTION	MATERIAL	FINISH	Q'TY	DRAWING NO
9	SHELL	NOTE 1	NOTE 2	1	N5000-1-B
8	GASKET	SILICONE	RED	1	GS-156/8X15
7	RETAINER RING	SUS 304	NATURAL	1	N5000-7-C
6	INNER BODY	NOTE 1	NOTE 2	1	172193-6
5	INSULATOR	NOTE 5	NATURAL	1	172193-5
4	CONTACT BODY	NOTE 1	NOTE 2	1	172193-4
3	INSULATOR	NOTE 5	NATURAL	1	172193-3
2	CONTACT PIN	NOTE 3	NOTE 4	1	172193-2
1	HOUSING WITH BODY	NOTE 1	NOTE 2	1	172193-1S-B

DIMENSIONS ARE IN MILLIMETERS

UNLESS OTHERWISE SPECIFIED TOLERANCES
0.5-6 = ±0.2
6-30 = ±0.4
30-120 = ±0.6
120-315 = ±1
315-1000 = ±1.6
1000-2000 = ±2.4

SCALE 2.5/1 | ISSUE A

PART NO. N5072A2-NT3G-50

APPROVED | DATE 10-11-01'

CHECKED | DATE 10-11-01'

DRAWN | DATE 10-11-01'

FILE NO

Amphenol

TITLE
N MALE TO FEMALE ADAPTOR

DRAWING NO.
KJ-N5072A2-NT3G-50

ITEM NO.