HA13520F

Combo (Spindle & VCM) Driver

The HA13520F is combination of Spindle and VCM Driver designed for HDD and have following functions and features.

Functions

- 1.0 A max/3-phase spindle motor driver
- 400 mA max VCM driver
- 100 mA max retract driver
- 11 bit serial interface
- 9 bit DAC for VCM control
- Commutation logic for sensor-less motor
- Center tap pull-up driver for half wave driver
- Soft switching matrix
- Charge pump
- Booster
- Power monitor
- OTSD

Features

- Low output saturation voltage
  - Spindle driver 1.0 V typ (@0.8 A)
    0.2 V typ (@0.1 A)
  - VCM driver 1.0 V typ (@400 mA)
- Soft switching drive
- Minimum surface mount package
  body size 7 × 7 mm

Block Diagram

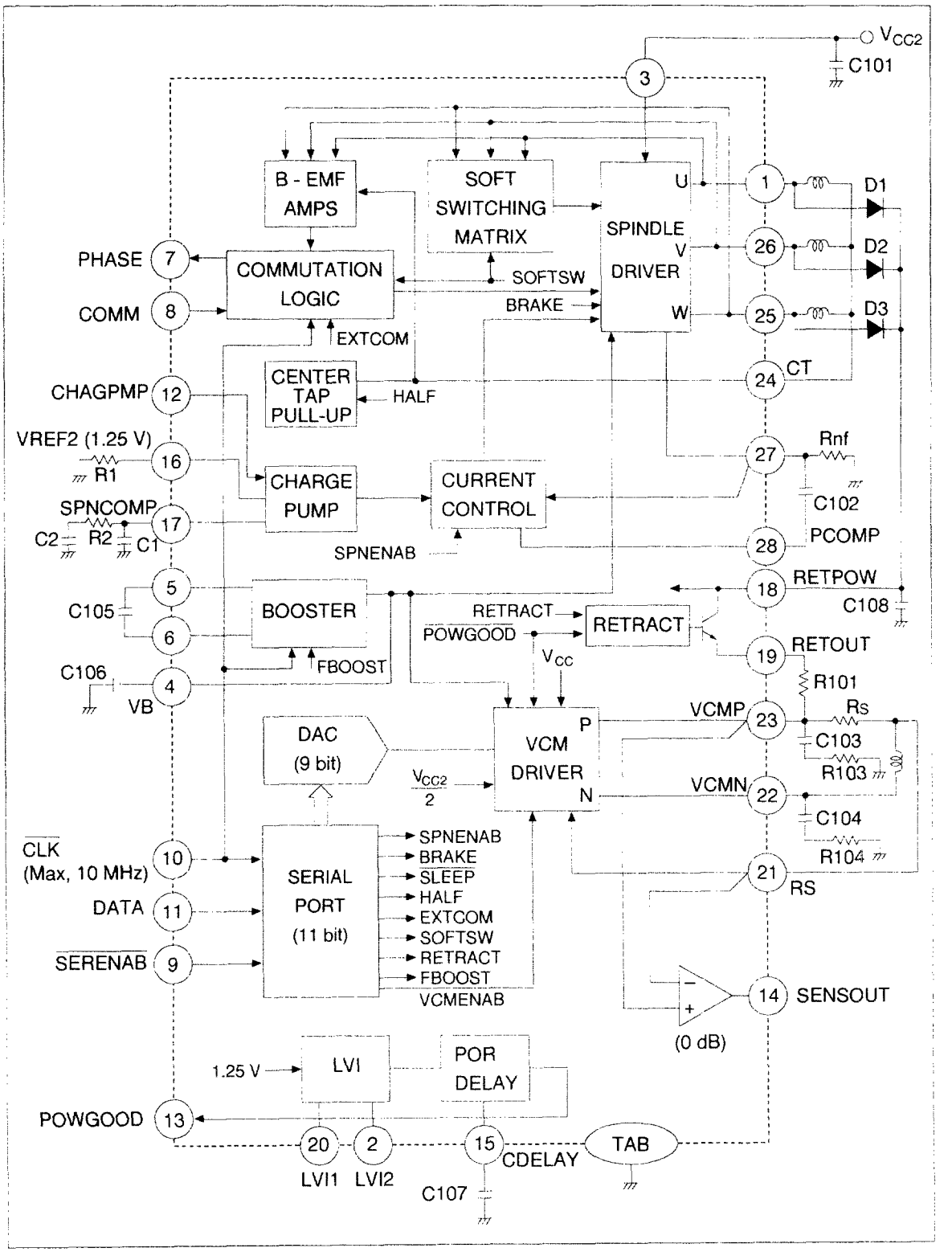

Serial Port

1. Construction

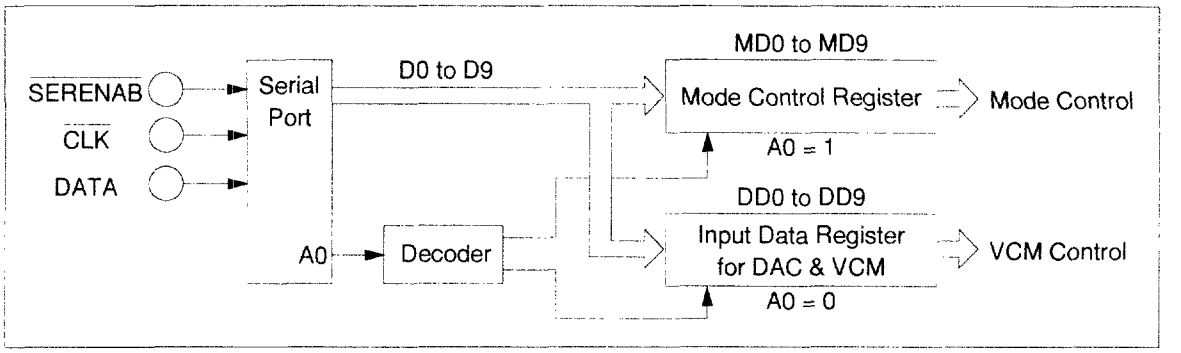

Figure 1 Serial Port

2. Data construction

2.1. Input Data Construction

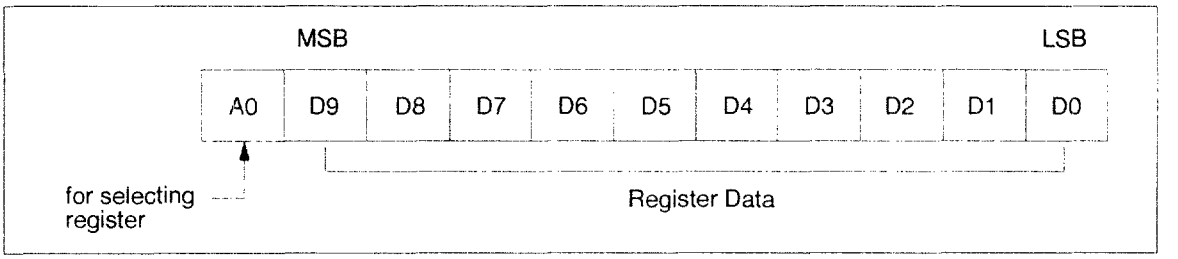

Figure 2 Input Data (1)

The serial port is required the 11 bit data (D0 to D9 and A0). Address bit A0 is used to select the register as follows. When the data length is less than 11 bits, the internal register will not be up dated. And when the data length is more than 11 bits, this register will take late 10 bits and ignore the faster bit.

A0	Resister
0	Input data register of DAC & VCMGAIN
1	Mode control register

2.2. Mode Control Register (A0 = 1)

Bit	Symbol	1	0	Note
MD0	SPNENAB	Spindle enable	Spindle disable	1
MD1	BRAKE	Brake enable	Brake disable	1
MD2	$\overline{\text{SLEEP}}$	Active	Sleep	
MD3	HALF	Half wave drive	Full wave drive	
MD4	EXTCOM	External commutation	Internal commutation	2
MD5	SOFTSW	Soft switching	Switching	
MD6	VCMENAB	VCM enable	VCM disable	
MD7	RETRACT	Retracting	Not retracting	
MD8	POLESEL	for 12 poles motor	for 8 poles motor	3
MD9	FBOOST	Low frequency	High frequency	4

Notes: 1. The spindle motor is independently winding to the value of the MD2, during the MD1 is true.

2. The bit MD4 select a commutation mode at driving by B-EMF sensing. (See Commutation timing)

3. In order to prevent the misdetection of back-EMF amplifier, the bit MD8 should be chosen as shown above table.

4. The bit MD9 determine the operating frequency of Booster Circuit. According to the frequency of Input CLK at pin 10, the value of MD9 should be chosen as shown below.

CLK (at pin 10)	MD9
7.1 MHz to 10 MHz	0
4.0 MHz to 7.0 MHz	1

2.3. Input Data Register (A0 = 0)

$\frac{\text{Bit}}{\text{DD0 to DD9}}$: These input data are used to control the output current at VCM driver as shown follows.

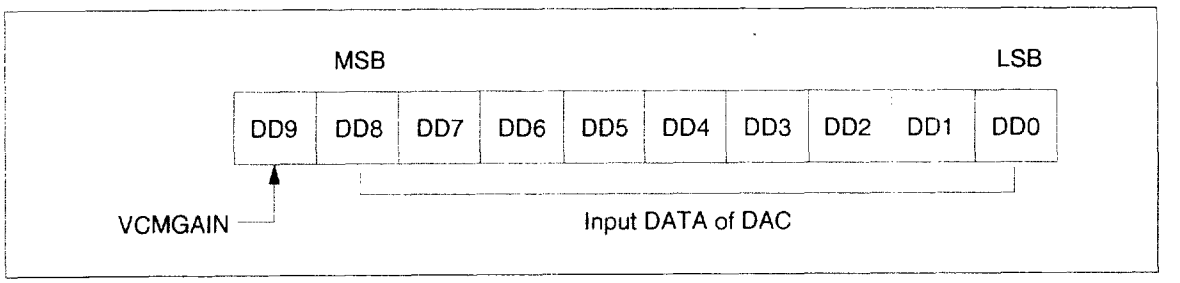

The data bit DD9 determine the transfer gain G_{VCM} which is specified as the relationship between the input data at the input data register and the output current at VCM amplifier. (See the right table)

DD9	DATA	I_O [mA]
1	1FF	$+199.2/R_S$
1	100	0.000
1	000	$-200.0/R_S$
0	1FF	$+49.8/R_S$
0	100	0.000
0	000	$-50.0/R_S$

Data Input Timing

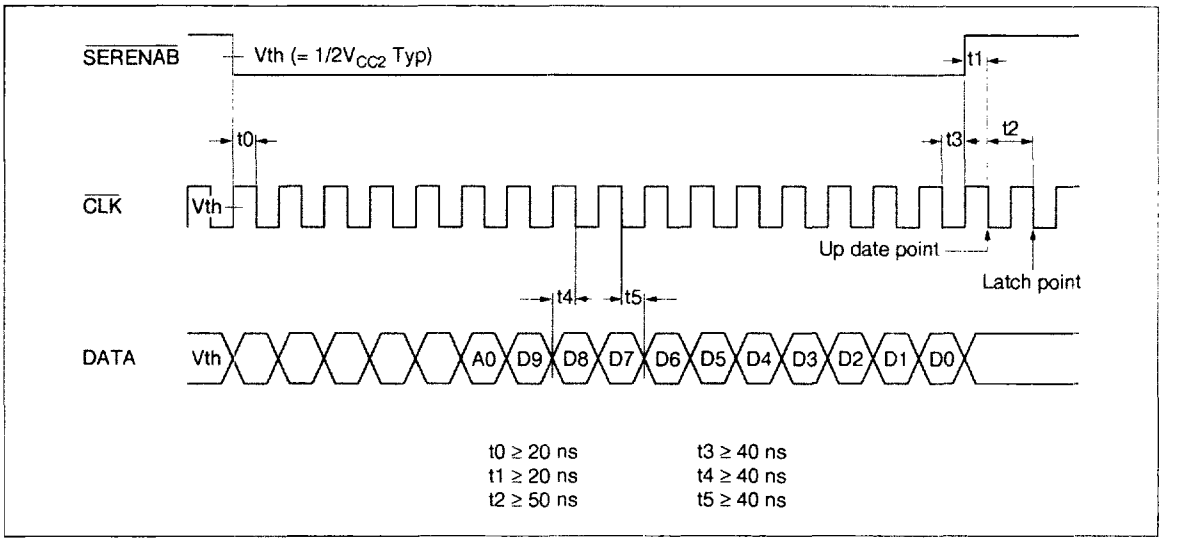

Figure 4 Input Timing on Serial Port

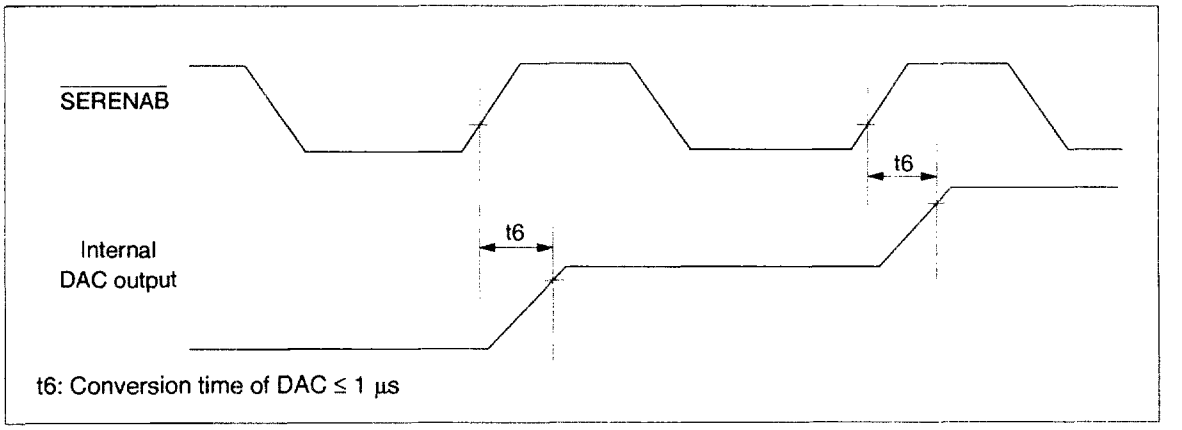

Figure 5 Conversion Timing on DAC

Commutation Timing

• Commutation for starting up

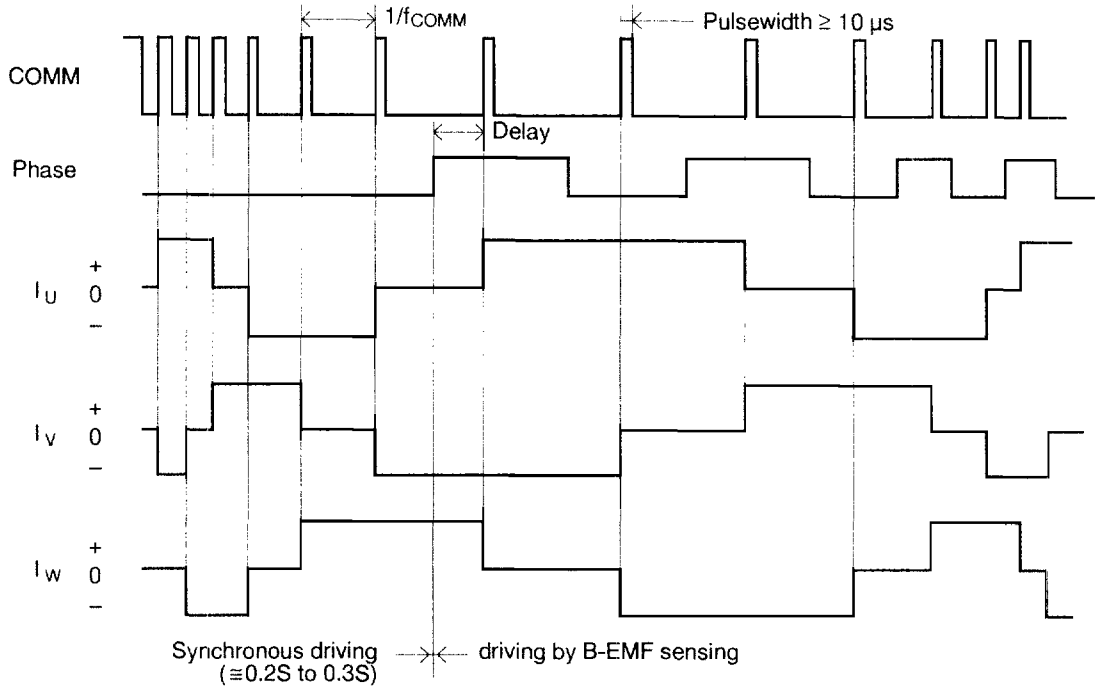

Note 1: The frequency of COMM signal f_{COMM} can be designed as follows.

$$f_{COMM} = 2.5\sqrt{\frac{P \cdot K_T \cdot I_O}{J}} \quad \text{(for begin of synchronous driving)} \quad [Hz] \quad (1)$$

$$f_{COMM} = 0.5\sqrt{\frac{P \cdot K_T \cdot I_O}{J}} \quad \text{(for end of synchronous driving)} \quad [Hz] \quad (2)$$

Where,

P: Pole number of spindle motor (Hz)
K_T: Torque constant (kg • cm/A)
I_O: Start up current (A)
J: Moment of inertia (kg • cm • S^2)

• External Commutation Mode (Full Wave Drive)

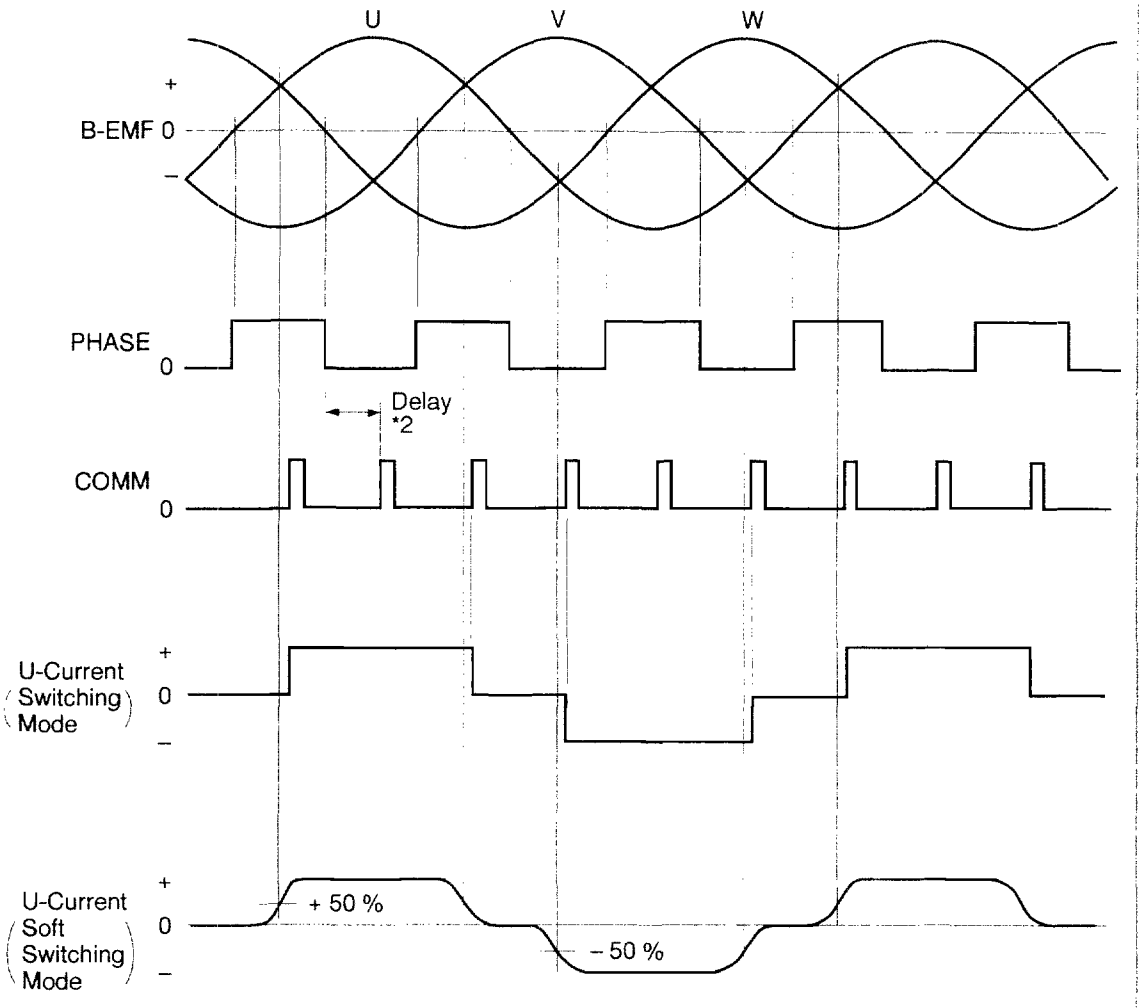

Note 2: Provided by MPU

• External Commutation Mode (Half Wave Mode)

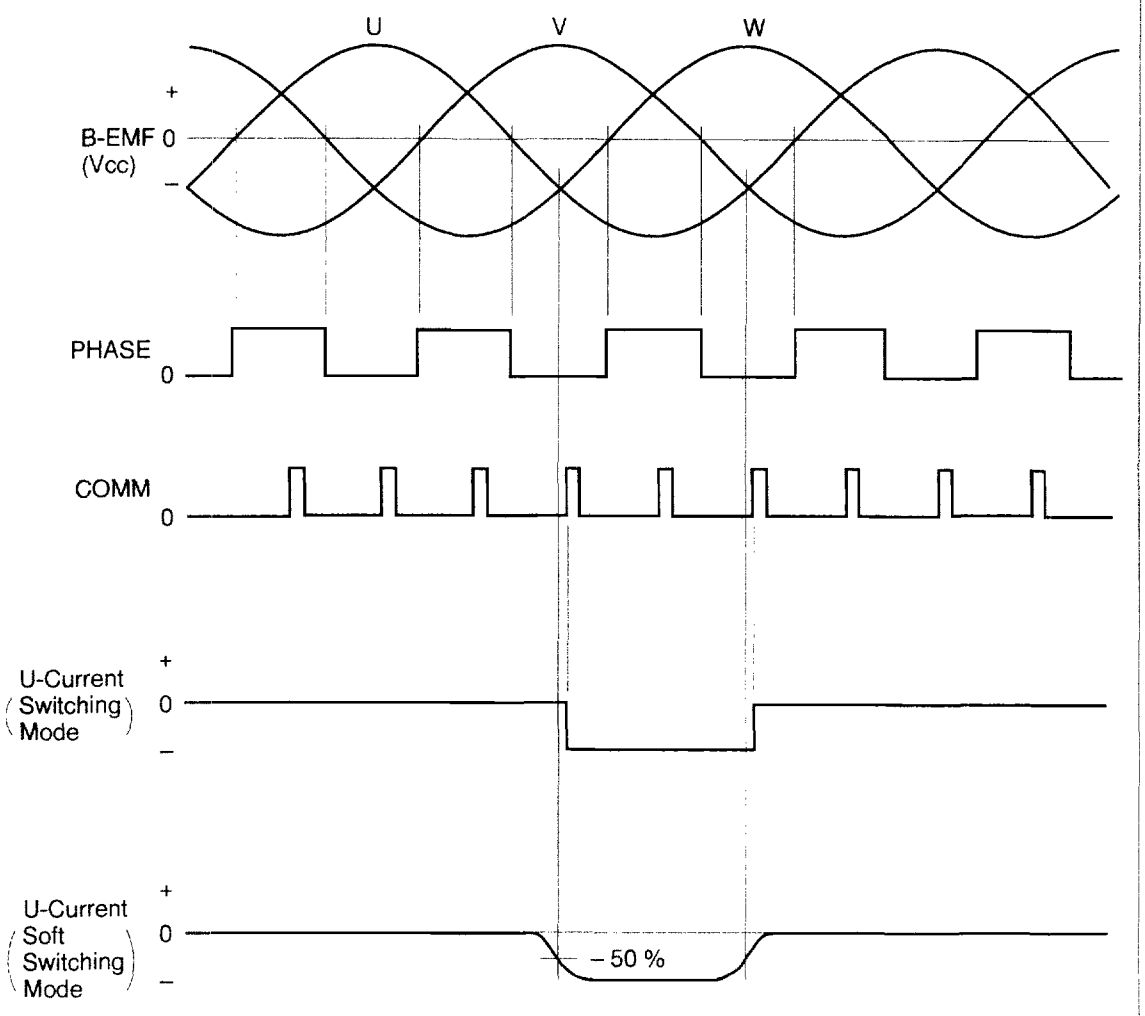

• Internal Commutation Mode (Half Wave Mode)

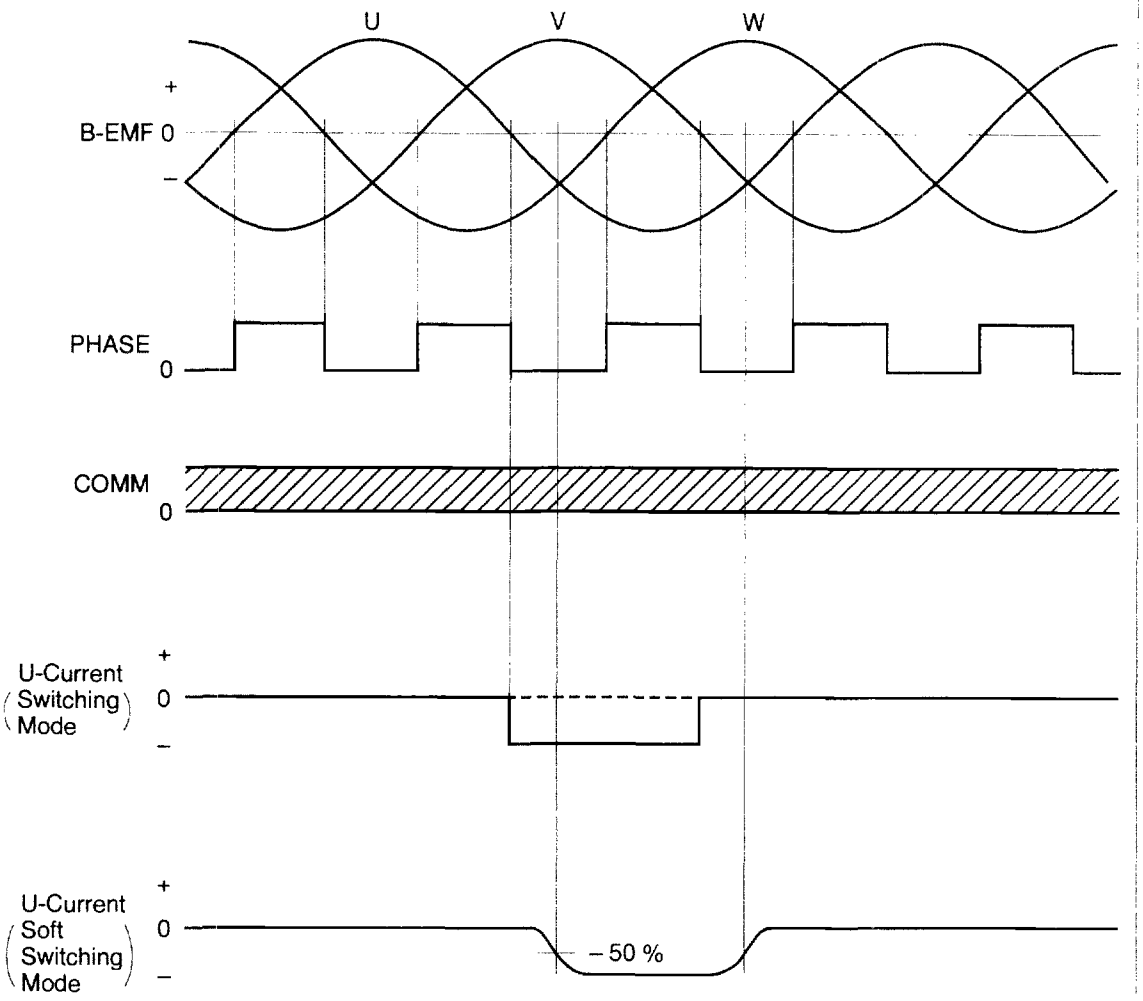

• Internal Commutation Mode (Full Wave Mode)

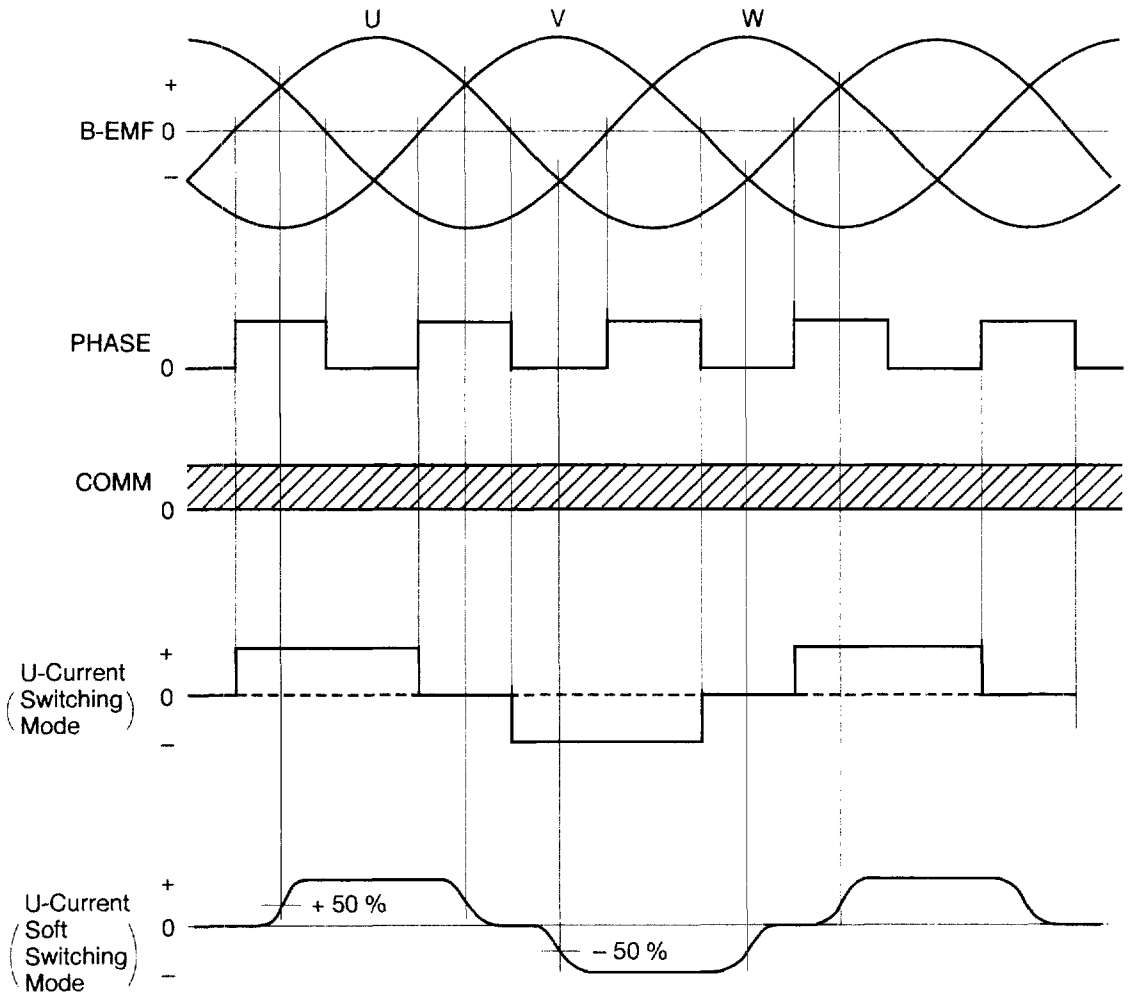

Note: When the internal commutation mode is selected, the commutation of the motor is automatically selected at the B-EMF sensing drive. But don't open the COMM terminal.

Application

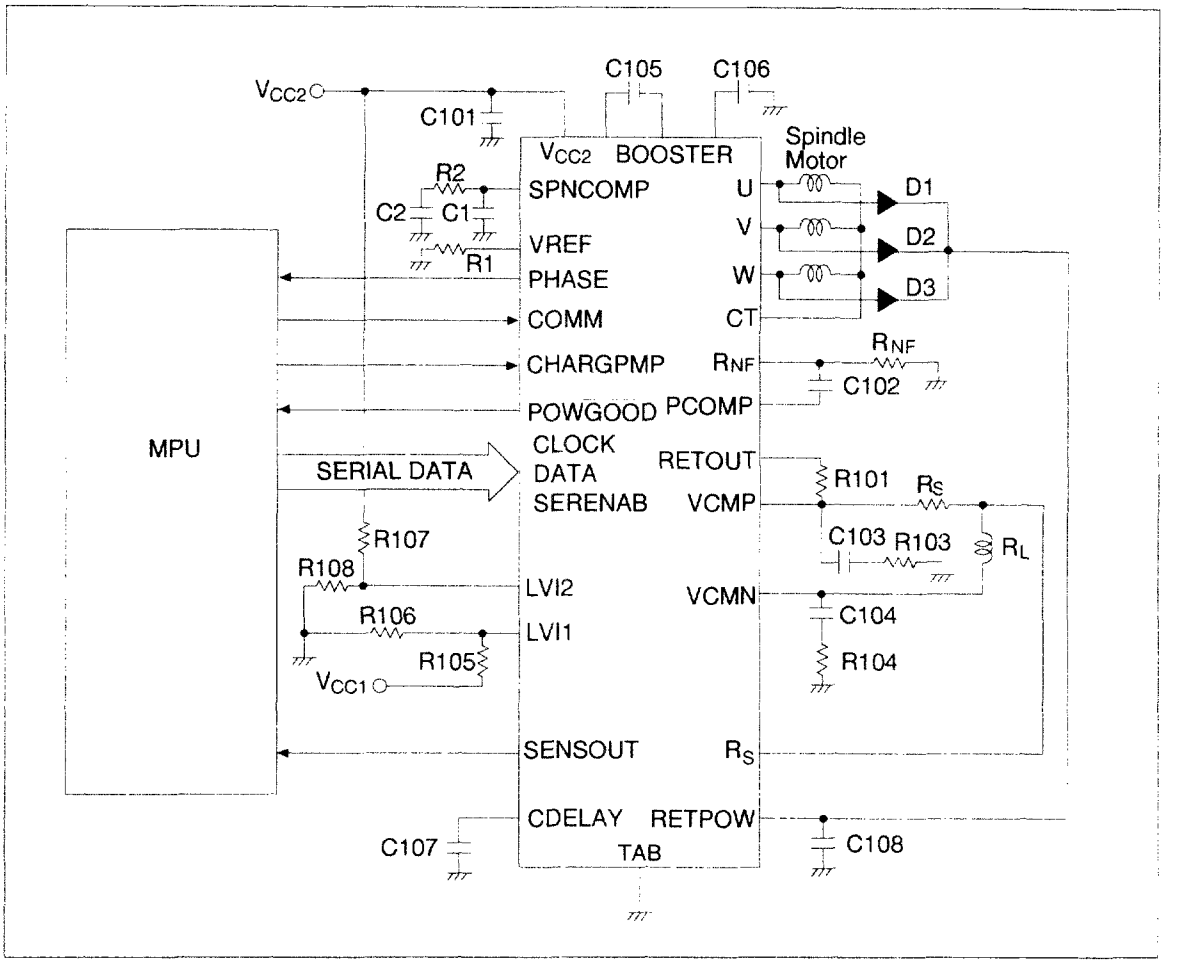

External Component

Parts No.	Recommended Value	Purpose	Notes
R_1	≤ 47 kΩ	Integral constant	1
R_2	—	Integral constant	1
R_{101}	—	Set retract current	2
R_{103}, R_{104}	2.2 Ω	For stability	
R_{105}, R_{106}, R_{107}, R_{108}	—	Set LVI operation voltage	3
R_{nf}	≥ 0.2 Ω	Spindle current sense	
R_S	0.47 Ω	VCM current sense	
C_1, C_2	—	Integral constant	1
C_{101}	0.1 μF	Power supply bypass	
C_{102}	0.1 μF	Phase compensation for spindle driver	
C_{103}, C_{104}	0.1 μF	For stability	
C_{105}	0.47 μF	For booster	
C_{106}	4.7 μF	For booster	
C_{107}	—	POR delay	4
C_{108}	—	Retpower filter	
D1, D2, D3	—	For retract	

Notes: 1. The integral constants can be designed as follows.

$$\omega_0 = \frac{2\pi N_0}{600} \quad (3)$$

$$\frac{R_2}{R_1} = \frac{J\ \omega_0 N_0 R_{NF}}{9.55Kt\ Gctl\ Vref2} \quad (4)$$

$$C_1 = \frac{1}{\sqrt{10}\ \omega_0 R_2} \quad (5)$$

$$C_2 = 10C_1 \quad (6)$$

Where,

ω_0 = Time constant of servo loop
N_0 = Rotation number (rpm)
J = Moment of inertia (kg cm s^2)
Kt = Torque constant (kg cm/A)
Rnf = Current sense resister (Ω)
Gctl = Control gain (See electrical characteristics)
Vref2 = Internal reference voltage (See electrical characteristics)

2. The retract current is determined as follows.

$$Iret = \frac{Vretpow - Vsatret}{R_{101} + R_L + R_S} \quad (7)$$

Where,
R_L = VCM coil Resister.
Vsatret = Retout saturation voltage (See electrical characteristics)

3. The LVI operation voltage V_{LVI} can be designed as follows.

$$V_{LVI1} = Vsd\left(1 + \frac{R_{105}}{R_{106}}\right) \quad \text{(for } V_{CC1}\text{)} \qquad (8)$$

$$V_{LVI2} = Vsd\left(1 + \frac{R_{107}}{R_{108}}\right) \quad \text{(for } V_{CC2}\text{)} \qquad (9)$$

(See electrical characteristics)

4. The motor start up current I_O is determined as follows.

$$I_0 = \frac{Vref1}{R_{NF}} \quad \text{(A)} \qquad (10)$$

Where, Vref1 = Current limiter reference voltage
(See electrical characteristics)

5. The power on reset delay time is determined as follows.
$t_{POR} = 10^5 \cdot C_{107}$ (See electrical characteristics) (11)

Absolute Maximum Ratings (Ta = 25°C)

Item	Symbol	Value	Units	Notes
Power supply voltage	V_{CC2}	7.0	V	1
Spindle current	Ispn	1.0	A	2
VCM current	Ivcm	400	mA	2
Retract current	Iret	100	mA	2
Input voltage	Vin	0 to V_{CC}	V	
Power dissipation				
Ta = 65°C	Pt1	1.0	W	3
Tc = 100°C	Pt2	2.0	W	3
Junction temperature	Tj	150	°C	4
Storage temperature range	Tstg	–55 to +125	°C	

Notes:
1. Operating voltage range is 4.25 V to 5.75 V.
2. ASO of each output transistor is shown below. Operating locus must be with in the ASO.
3. Thermal resistance is shown below.
   $\theta j - c \leq 25°C/W$
   $\theta j - a \leq 80°C/W$
4. Operating junction temperature range is 0 to +125°C.

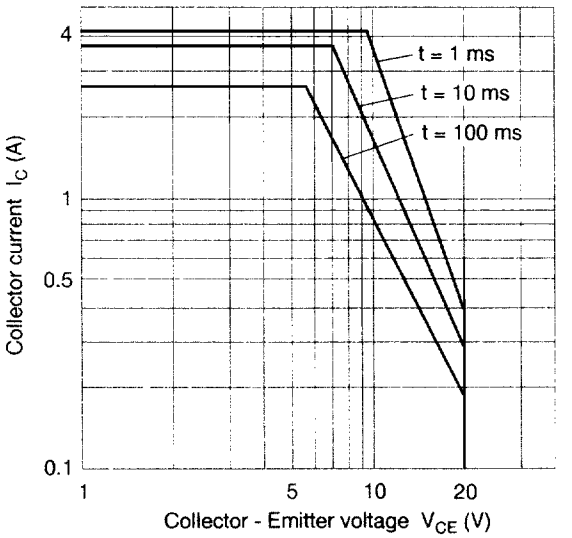

Figure 1 ASO of Output Transistor (Spindle Driver)

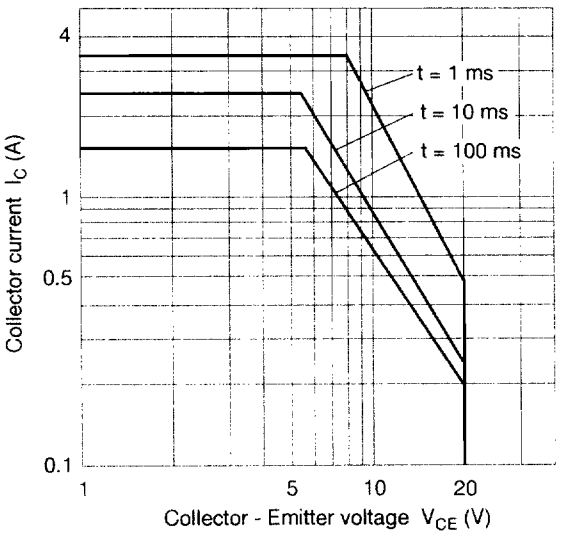

Figure 2 ASO of Output Transistor (VCM Driver)

Electrical Characteristics (Ta = 25°C, V_{CC} = 5 V)

Item		Symbol	Min	Typ	Max	Units	Test Conditions	Applicable Terminal	Note
Supply current		I_{CC0}	—	2.5	5.0	mA	Sleep mode	3	
		I_{CC1}	—	15	20	mA	Enable mode		
Logic input	Input low current	I_{IL}	—	0	±10	μA	V_{IL} = 0 V	7, 9, 10, 11	
	Input high current	I_{IH}	—	—	±10	μA	V_{IH} = 5 V		
	Input low voltage	V_{IL}	—	—	1.5	V			
	Input high voltage	V_{IH}	3.5	—	—	V			
	Clock frequency	f_{CLK}	—	—	10	MHz			
Logic output	Output high voltage	V_{OH}	4.4	—	—	V	I_{OH} = 1 mA	8, 13	
	Output low voltage	V_{OL}	—	—	0.4	V	I_{OL} = 1 mA		
Spindle driver	Total saturation voltage	Vsatspn	—	1.0	1.4	V	Ispn = 0.8 A	1, 25, 26	
			—	0.2	0.3	V	Ispn = 100 mA		
	Output leak current	Icer1	—	—	5	mA	MD3 = 1, V_O = V_{CC} + 3 V		
	Current limiter reference voltage	Vref1	139	155	171	mV	R_{NF} = 1.0 Ω		
	Current control gain	Gctl	–14	–12	–10	dB			
B-EMF amps	Input sensitivity	Vmin	—	50	—	mVp-p		1, 25, 26	1
Chage pump	Input high voltage	V_{IHCP}	3.5	—	—	V		12	
	Input low voltage	V_{ILCP}	—	—	1.5	V			
	Input high current	I_{IHCP}	—	150	200	μA	V_{IHCP} = 5 V		
	Input dead current	I_{IDCP}	—		±10	μA			
	Input low current	I_{ILCP}	—	–150	–200	μA	V_{ILCP} = 0 V		
	Output current	Charge current	+44	+54	+64	μA	R1 = 24 kΩ	17	
		Discharge current	–64	–54	–44	μA	R1 = 24 kΩ		
	Output cutoff current	Ioff	—	—	±50	nA			
	Reference voltage	Vref2	1.32	1.39	1.46	V	R1 = 24 kΩ	16	
VCM driver	Output quiescent voltage	Vq	Vcc2/2	Vcc2/2 +5%	Vcc2/2 +10%	V		22, 23	
	Output leak current	Icer2	—	—	±5	mA			1

Electrical Characteristics (Ta = 25°C, V_{CC} = 5 V) (cont)

Item		Symbol	Min	Typ	Max	Units	Test Conditions	Applicable Terminal	Note
VCM driver	Total output saturation voltage	Vsatvcm	—	1.0	1.35	V	Ivcm = 400 mA	21, 22, 23	
			—	0.8	1.0	V	Ivcm = 200 mA		
	Resolution	Ires	—	1/512	—	—			1
	Output current full scale	I_{FS1}	360	400	440	mA	DD9=1, R_S=1 Ω, R_L = 14 Ω		
		I_{FS2}	90	100	110	mA			
	Offset	Ioff1	—	—	±15	LSB			
		Ioff2	—	—	±15	LSB			
	Linearity	I_{LIN}	—	—	±1	LSB			
	Gain Bandwidth	B	—	40	—	kHz	DD9 = 1, R_S = 1 Ω, R_L = 14 Ω		1
			—	95	—	kHz	DD9 = 0		
Current sensing amp for VCM	Transfer gain	Gsens	10	12	14	dB		14, 21, 23	
	Output reference voltage	Vref3	2.4	2.6	2.8	V			
	Output capability	Iomax	—	—	±100	μA		14	
Retract driver	Retpow voltage	Vretpow	1.4	—	—	V	R_S = 1 Ω, R_L = 14 Ω Iret = 100 mA	18	
	Retout saturation voltage	Vsatret	—	1.0	1.2	V	Iret = 100 mA	19	
LVI	Operating voltage	Vsd	1.26	1.34	1.42	V		2, 3, 13, 20	
	Hysteresis	Vhys	—	0.15	—	V		2, 3, 13, 20	1
	Power on reset delay time	POR	5	10	20	ms	C_{107} = 0.1 μF	13	
OTSD	Operating temperature	Tsd	125	150	—	°C			1
	Hysteresis	Thys	—	25	—	°C			

Note: 1. Design guide only.