DS04-13202-3aE

FUJITSU

DATA SHEET

LINEAR IC CMOS
8 BIT 4-CHANNEL D/A CONVERTER
MB86021

CMOS 8-BIT 4-CHANNEL D/A CONVERTER

The Fujitsu MB86021 is a 8-bit 4-channel Digital to Analog Converter which is fabricated with Fujitsu CMOS Technology. The data latch and output buffer circuitry are provided on each channel which can operate independently selected by 2bit data.

- Resolution : 8-Bits (4-channels)
- Conversion Rate : 200k sps
- Digital Input Voltage : TTL Level
- Power Supply Voltage : ±5V
- Low Power Dissipation : 38mW typ. at ±5V
- Each channel operates independently
- On-chip Data Initialization & Power Down Function
- Reference voltage mode selection: On-chip or External generation
- Easy to take interface with micro processor (Parallel Data Input)

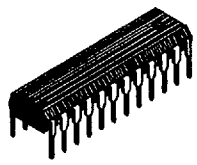

PLASTIC PACKAGE
DIP-24P-M03

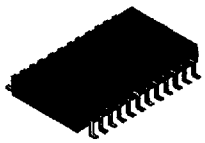

PLASTIC PACKAGE
FPT-24P-M02

PIN ASSIGNMENT
(TOP VIEW)

D0	1	24	$\overline{RESET}$
D1	2	23	$\overline{PD}$
D2	3	22	V_{DD}
D3	4	21	VR2
D4	5	20	VR1
D5	6	19	AO0
D6	7	18	AO1
D7	8	17	AO2
C0	9	16	AO3
C1	10	15	V_{SS}
$\overline{WR}$	11	14	AG
$\overline{CE}$	12	13	DG

This device contains circuitry to protect the inputs against damage due to high static voltages or electric fields. However, it is advised that normal precautions be taken to avoid application of any voltage higher than maximum rated voltages to this high impedance circuit.

Quick Pro™ is a trademark of FUJITSU LIMITED
Copyright© 1995 by FUJITSU LIMITED

3749756 0010351 497

ABSOLUTE MAXIMUM RATINGS (See NOTE)

Parameter	Symbol	Pin Name	Rating			Unit
			Min	Typ	Max	
Power supply voltage1	V_{DD}	V_{DD}	GND−0.3	–	7	V
Power supply voltage2	V_{SS}	V_{SS}	−7		GND+0.3	V
Digital input voltage		All digital input pins	GND−0.3		V_{DD}+0.3	
Analog input voltage	V_1, V_2	VR1,VR2	GND−0.3	–	V_{DD}+0.3	V
Analog output voltage	V_{AO}	AO0,AO1,AO2,AO3	V_{SS}−0.3	–	V_{DD}+0.3	V
Analog output voltage	I_{AO}	AO0,AO1,AO2,AO3	−10	–	10	mA
Storage temperature	Tstg		−40	–	125	°C

NOTE: Permanent device damage may occur if the above **Absolute Maximum Ratings** are exceeded. Functional operation should be restricted to the conditions as detailed in the operational sections of this data sheet. Exposure to absolute maximum rating conditions for extended periods may affect device reliability.

3749756 0010352 323

BLOCK DIAGRAM

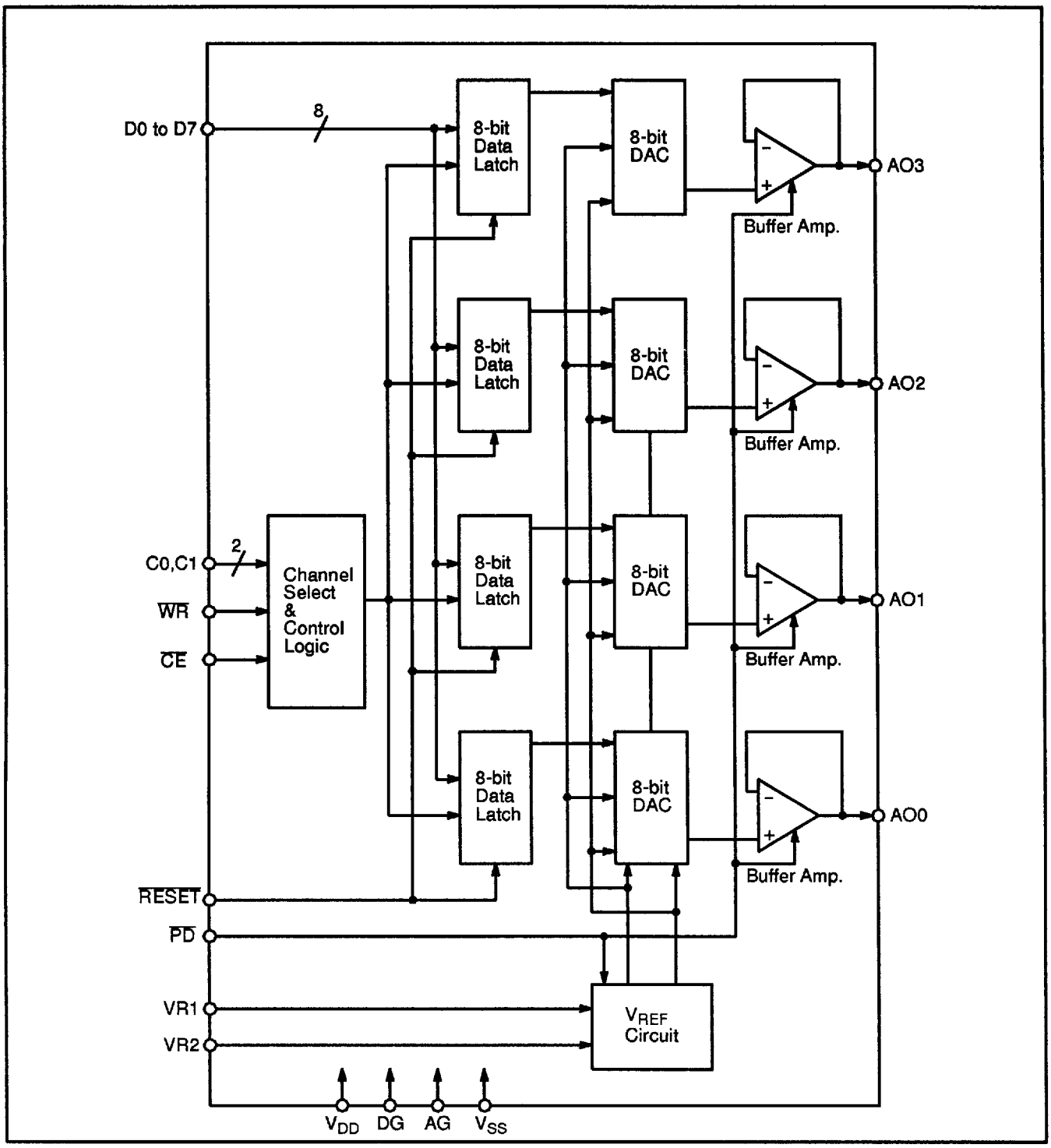

3749756 0010353 26T

PIN DESCRIPTION

System	Pin Number	Symbol	Descriptions
Power Supply	22	V_{DD}	Power supply voltage 5V
	15	V_{SS}	Power supply voltage −5V
	13	DG	GND for Digital System
	14	AG	GND for Analog System
Digital Input	23	$\overline{PD}$	Power down control signal pin. The circuit is set power down when this pin goes to "L". This pin is pulled up by high resistance. TTL interface.
	24	$\overline{RESET}$	Reset input signal pin. The data at all channels is initialized when this pin goes to "L". At this time, the D/A output is set at D(A)=128. This pin is pulled up by high resistance. TTL interface.
	12	$\overline{CE}$	Chip enable signal pin. The data can be written when this pin goes to "L". This pin is pulled up by high resistance. TTL interface.
	11	$\overline{WR}$	Data write pin. The data from D0 to D7 is written when the rising edge (L → H) of this pin. TTL interface.
	9	C0	Channel selection signal pin. Channels are selected by following table. TTL interface.
	10	C1	
	1	D0	Data input signal pin. The digital data is read by the channel which is selected by C0 and C1 pins when the rising edge of $\overline{WR}$ (L → H), and analog output is shown correspond to that digital code. D0 is LSB and D7 is MSB. Code is set at 10000000 when reset. TTL interface.
	2	D1	
	3	D2	
	4	D3	
	5	D4	
	6	D5	
	7	D6	
	8	D7	
Analog Input	20	VR_1	Reference voltage (H level) input pin. $\frac{1}{2}V_{DD}$ is given by internal reference voltage circuitry to this pin when internal reference voltage mode. In this case, the capacitor between this pin and AG pin is required to limit noise generation. In case of external reference voltage mode, the reference voltage should be given from this pin.
	21	VR_2	Middle point of reference voltage input pin. This pin should be AG level when internal reference voltage mode. In case of external reference voltage mode, the middle point of reference voltage should be given from this pin.

C1	C0	Channel
L	L	0
L	H	1
H	L	2
H	H	3

3749756 0010354 1T6

(Continued)

System	Pin Number	Symbol	Descriptions
Analog Output	16	AO3	Analog output pin of channel 3. This pin is set to high-impedance state at Power Down.
	17	AO2	Analog output pin of channel 2. This pin is set to high-impedance state at Power Down.
	18	AO1	Analog output pin of channel 1. This pin is set to high-impedance state at Power Down.
	19	AO0	Analog output pin of channel 0. This pin is set to high-impedance state at Power Down.

3749756 0010355 032

RECOMMENDED OPERATING CONDITIONS

Parameter	Symbol	Pin Name	Value			Unit
			Min	Typ	Max	
Power supply voltage1	V_{DD}	V_{DD}	4.75	5.0	5.25	V
Power supply voltage2	V_{SS}	V_{SS}	-5.25	-5.0	-4.75	V
Digital input voltage	V_{DI}	All digital input pins	0	-	V_{DD}	V
Analog input voltage	V_1	VR1	-3.0	2.5	3.0	V
	V_2	VR2	$\frac{V_1-3.0}{2}$	0	$\frac{V_1+3.0}{2}$	V
Analog output load resistance	R_{AL}	AO0, AO1, AO2, AO3	20	-	-	kΩ
Analog output load capacitance	C_{AL}		-	-	50	pF
Operating temperature	Ta		-20	-	70	°C

3749756 0010356 T79

ELECTRICAL CHARACTERISTICS

(V_{DD}=4.75V to 5.25V, V_{SS}=−5.25V to −4.75V, Ta=−20°C to 70°C)

Parameter		Symbol	Pin Name	Conditions		Value Min	Value Typ	Value Max	Unit
Power supply current 1		I_{DD1}	V_{DD}	No load	PD="H"	–	3.8	7.5	mA
		I_{DD2}			PD="L"	–	–	0.5	mA
Power supply current 2		I_{SS1}	V_{SS}		PD="H"	−7.5	−3.8	–	mA
		I_{SS2}			PD="L"	−0.5	–	–	mA
Digital Input	"L" Voltage	V_{IL}	All digital input pins			0	–	0.8	V
	"H" Voltage	V_{IH}				2.2	–	V_{DD}	V
	"L" Current	I_{IL}	D0 to D7, $\overline{WR}$	V_{DI}=GND		−10	–	10	µA
	"H" Current	I_{IH}		V_{DI}=V_{DD}		−10	–	10	µA
Pull upcurrent		I_{PLU}	$\overline{PD}$, $\overline{CE}$, $\overline{RESET}$	V_{DI}=GND		−100	−50	−25	µA
$\overline{WR}$ "H" Width		t_{WHWR}	$\overline{WR}$	Ref. to timing chart		200	–	–	ns
$\overline{WR}$ "L" Width		t_{WLWR}	$\overline{WR}$	Ref. to timing chart		200	–	–	ns
Digital input "L" width		t_{WLRP}	$\overline{RESET}$, $\overline{PD}$	Ref. to timing chart		500	–	–	ns
DATA set up time 1		t_{SD1}	D0 to D7, $\overline{WR}$	Ref. to timing chart		100	–	–	ns
DATA set up time 2		t_{SD2}	C0, C1, $\overline{WR}$	Ref. to timing chart		100	–	–	ns
$\overline{CE}$ set up time		t_{SCE}	$\overline{CE}$, $\overline{WR}$	Ref. to timing chart		0	–	–	ns
DATA Hold time 1		t_{HD1}	D0 to D7, $\overline{WR}$	Ref. to timing chart		50	–	–	ns
DATA Hold time 2		t_{HD2}	C0, C1, $\overline{WR}$	Ref. to timing chart		50	–	–	ns
$\overline{CE}$ Hold time		t_{HCE}	$\overline{CE}$, $\overline{WR}$	Ref. to timing chart		0	–	–	ns

3749756 0010357 905

(Continued) (V_{DD}=4.75V to 5.25V, V_{SS}=−5.25V to −4.75V, Ta=−20°C to 70°C)

Parameter	Symbol	Pin Name	Conditions		Value Min	Value Typ	Value Max	Unit
Rising time 1	t_{r1}	$\overline{WR}$	Ref. to timing chart		0	–	50	ns
Falling time 1	t_{f1}	$\overline{WR}$	Ref. to timing chart		0	–	50	ns
Rising time 2	t_{r2}	D0 to D7, C0, C1, $\overline{CE}$, $\overline{RESET}$, $\overline{PD}$	Ref. to timing chart		0	–	50	ns
Falling time 2	t_{f2}	D0 to D7, C0, C1, $\overline{CE}$, $\overline{RESET}$, $\overline{PD}$	Ref. to timing chart		0	–	50	ns
Resolution	Res	AO0, AO1, AO2, AO3			–	8	–	bits
Analog output Min. voltage	V_{AOL1}	AO0, AO1, AO2, AO3	Input Code D(A)=0	No external VR input VR1=open VR2=0V (AG)	(Typ.) −0.1	$-\frac{1}{2} \times V_{DD}$	(Typ.) +0.1	V
	V_{AOL2}			External VR input VR1=V_1 VR2=V_2	(Typ.) −0.1	$2 \times V_2 - V_1$	(Typ.) +0.1	V
Analog output Max. voltage	V_{AOH1}		Input Code D(A)=255	No external VR input VR1=open VR2=0V (AG)	(Typ.) −0.1	$\frac{127}{256} \times V_{DD}$	(Typ.) +0.1	V
	V_{AOH2}			External VR input VR1=V_1 VR2=V_2	(Typ.) −0.1	$V_1 - \frac{V_1 - V_2}{128}$	(Typ.) +0.1	V
Analog input resistance	R_I	VR_1			30	50	200	kΩ
Analog input leak current	I_{AIH}	VR_2	$V_{IH}=V_{DD}$		−10	–	10	μA
	I_{AIL}		$V_{IL}=V_{SS}$		−10	–	10	μA
Linearity error	LE	AO0, AO1, AO2, AO3	No external VR input VR1=open VR2=0V (AG)		−1.5	–	1.5	LSB
Differential linearity error	D_{LE}				−1	–	1	LSB
Setting time	t_S		Full scale change (Ref. to timing chart)		–	–	5	μs

3749756 0010358 841

FUNCTION DESCRIPTION

TRUTH TABLE

$\overline{PD}$	$\overline{RESET}$	$\overline{CE}$	$\overline{WR}$	C0, C1	D0 to D7	Function
0	x	x	x	–	–	Power down
1	0	x	x	–	–	Initialization
1	1	1	x	–	No data input	No analog output change
1	1	0	↑	Channel selection	Data input	Analog output change

Fig. 1 – DATA SET TIMING DIAGRAM

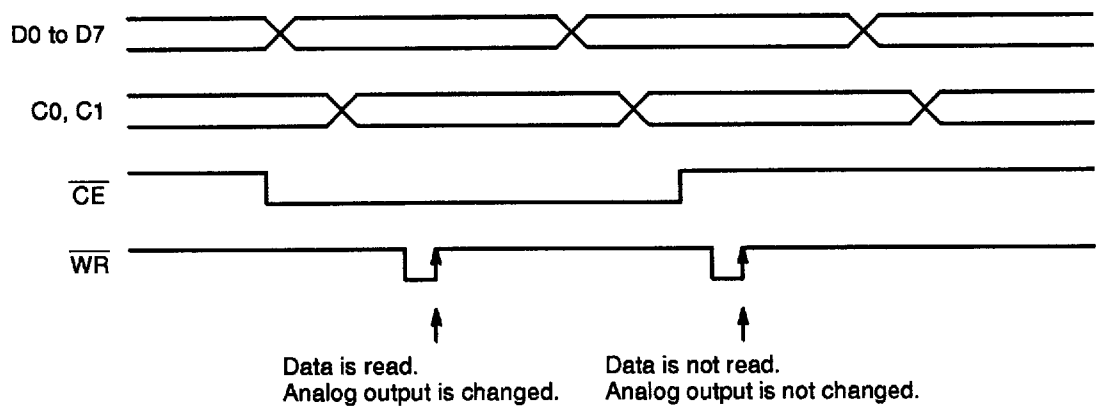

3749756 0010359 788

SETTING OF ANALOG OUTPUT VOLTAGE

Data									Analog Output Voltage		
D(A)	D7	D6	D5	D4	D3	D2	D1	D0	VR1=Open VR2=0V (AG) (No external VR Input)	VR1=V_1 VR2=0V (AG) (External VR1 input)	VR1=V_1 VR2=V_2 (External VR input)
255	1	1	1	1	1	1	1	1	$\frac{127}{256} \times V_{DD}$	$\frac{127}{128} \times V_1$	$\frac{V_1-V_2}{128} \times 127 + V_2$
254	1	1	1	1	1	1	1	0	$\frac{126}{256} \times V_{DD}$	$\frac{126}{128} \times V_1$	$\frac{V_1-V_2}{128} \times 126 + V_2$
253	1	1	1	1	1	1	0	1	$\frac{125}{256} \times V_{DD}$	$\frac{125}{128} \times V_1$	$\frac{V_1-V_2}{128} \times 125 + V_2$
⋮					⋮				$\frac{1}{256} \times V_{DD} \times (D(A)-128)$	$\frac{V_1}{128} \times (D(A)-128)$	$\frac{V_1-V_2}{128} \times (D(A)-128) + V_2$
129	1	0	0	0	0	0	0	1	$\frac{1}{256} \times V_{DD}$	$\frac{1}{128} \times V_1$	$\frac{V_1-V_2}{128} + V_2$
128	1	0	0	0	0	0	0	0	0	0	V_2
127	0	1	1	1	1	1	1	1	$-\frac{1}{256} \times V_{DD}$	$-\frac{1}{128} \times V_1$	$\frac{V_1-V_2}{128} \times (-1) + V_2$
126	0	1	1	1	1	1	1	0	$-\frac{2}{256} \times V_{DD}$	$-\frac{2}{128} \times V_1$	$\frac{V_1-V_2}{128} \times (-2) + V_2$
⋮					⋮				⋮	⋮	⋮
2	0	0	0	0	0	0	1	0	$-\frac{126}{256} \times V_{DD}$	$-\frac{126}{128} \times V_1$	$\frac{V_1-V_2}{128} \times (-126) + V_2$
1	0	0	0	0	0	0	0	1	$-\frac{127}{256} \times V_{DD}$	$-\frac{127}{128} \times V_1$	$\frac{V_1-V_2}{128} \times (-127) + V_2$
0	0	0	0	0	0	0	0	0	$-\frac{1}{2} \times V_{DD}$	$-V_1$	$-(V_1-V_2) + V_2$
1LSB									$\frac{1}{256} \times V_{DD}$	$\frac{1}{128} \times V_1$	$\frac{V_1-V_2}{128}$

* Code is set at "10000000" when reset mode.

3749756 0010360 4TT

ANALOG OUTPUT VOLTAGE RANGE

(VR1=OPEN, VR2=0V (AG))

Fig. 2 – ON-CHIP REFERENCE VOLTAGE MODE

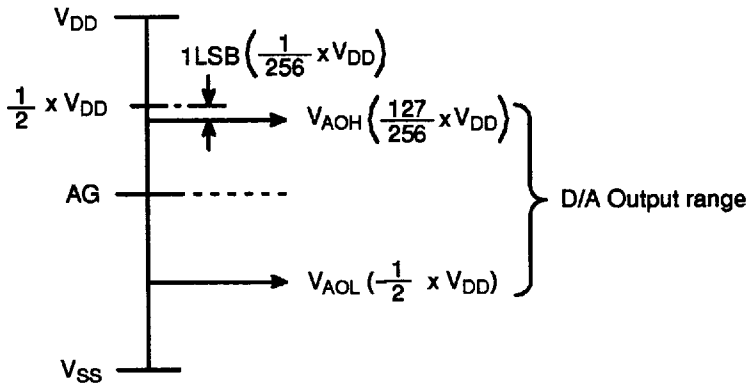

(VR1=V_1, VR2=0V (AG))

Fig. 3 – EXTERNAL REFERENCE VOLTAGE MODE

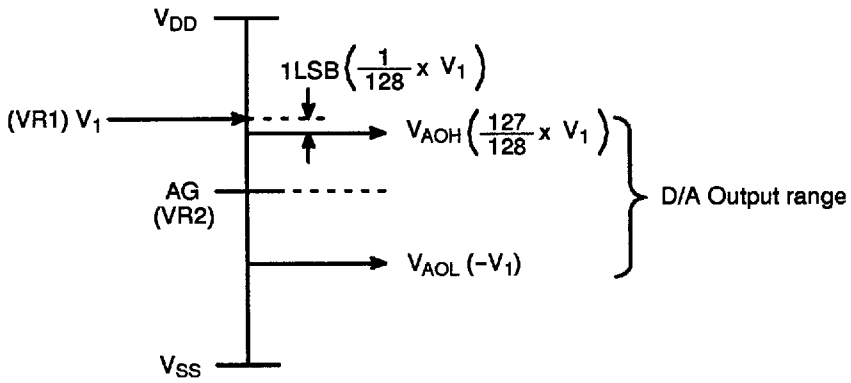

(VR1=V_1, VR2=V_2)

Fig. 4 – EXTERNAL REFERENCE VOLTAGE MODE

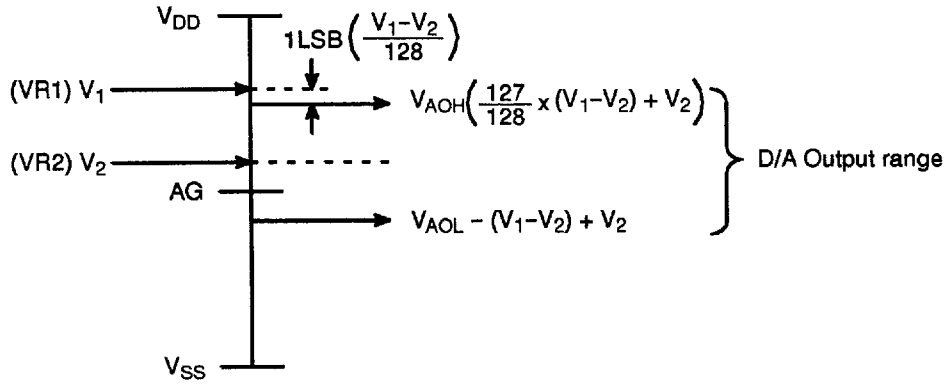

3749756 0010361 336

TYPICAL APPLICATION CIRCUIT FOR EACH MODE

(VR1=OPEN, VR2=0V (AG))

Fig. 5 – ON-CHIP REFERENCE VOLTAGE MODE

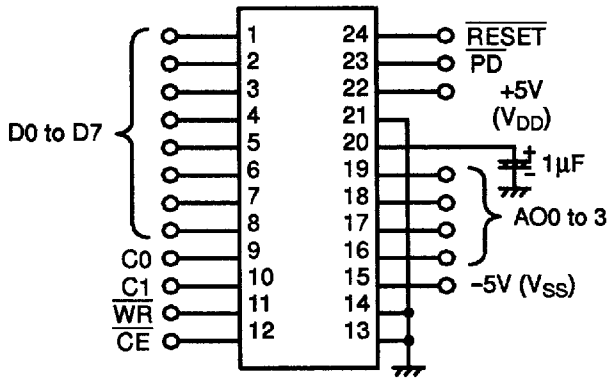

(VR1=V_1, VR2=0V (AG))

Fig. 6 – EXTERNAL REFERENCE VOLTAGE MODE

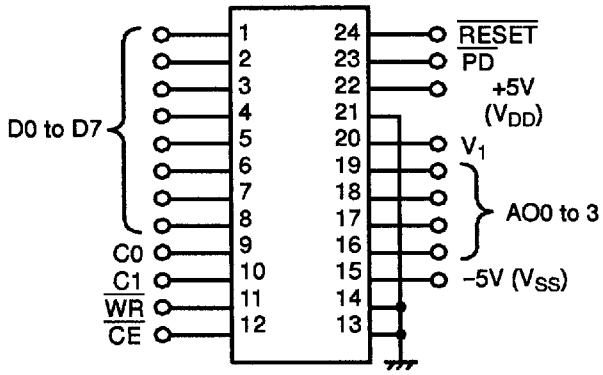

(VR1=V_1, VR2=V_2)

Fig. 7 – ON-CHIP REFERENCE VOLTAGE MODE

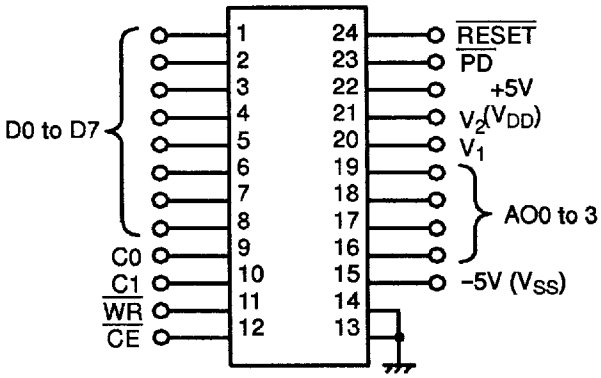

3749756 0010362 272

TIMING DIAGRAM

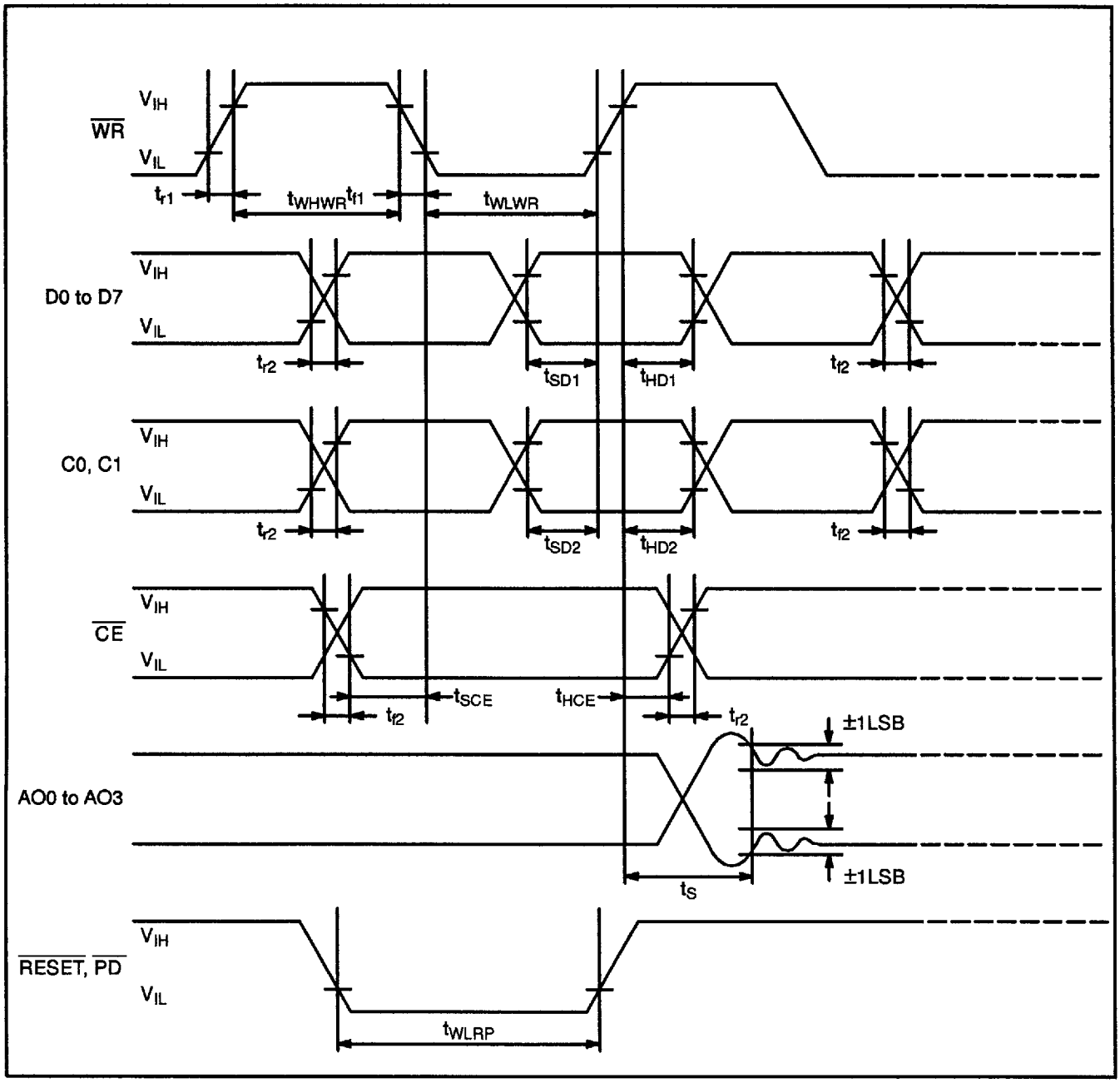

3749756 0010363 109

PACKAGE DIMENSIONS

24-LEAD PLASTIC DUAL IN-LINE PACKAGE
(CASE No.: DIP-24P-M03)

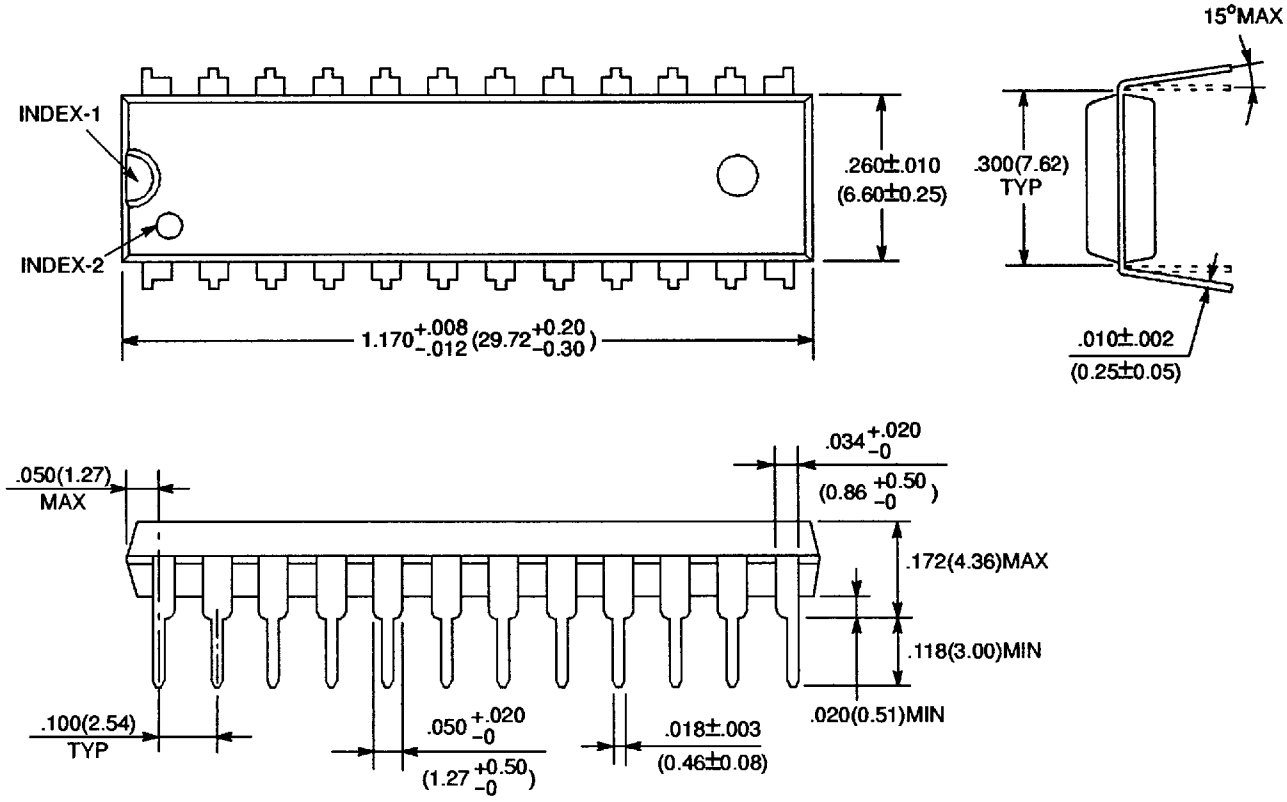

Dimensions in inches (millimeters)

©1991 FUJITSU LIMITED D24017S-3C

3749756 0010364 045

24-LEAD PLASTIC FLAT PACKAGE
(CASE No.: FPT-24P-M02)

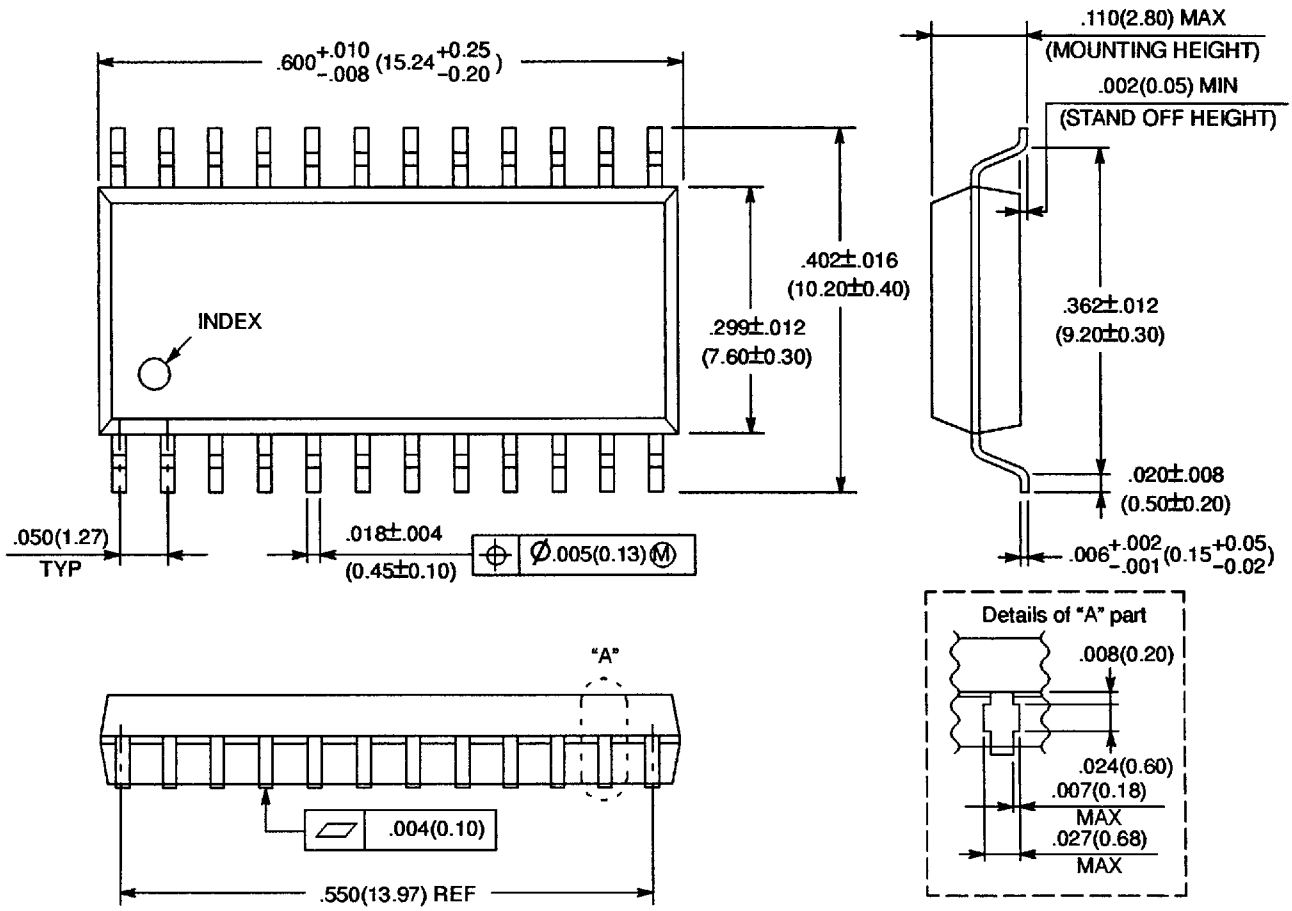

©1991 FUJITSU LIMITED F24008S-4C

Dimensions in inches (millimeters)

All Rights Reserved.

Circuit diagrams utilizing Fujitsu products are included as a means of illustrating typical semiconductor applications. Complete Information sufficient for construction purposes is not necessarily given.

The Information contained in this document has been carefully checked and is believed to be reliable. However, Fujitsu assumes no responsibility for inaccuracies.

The Information contained in this document does not convey any license under the copyrights, patent rights or trademarks claimed and owned by Fujitsu.

Fujitsu reserves the right to change products or specifications without notice.

No part of this publication may be copied or reproduced in any form or by any means, or transferred to any third party without prior written consent of Fujitsu.

3749756 0010365 T81

FUJITSU LIMITED

For further information please contact:

Japan

FUJITSU LIMITED
Electronic Devices
International Operations Department
KAWASAKI PLANT, 1015 Kamikodanaka,
Nakahara-ku, Kawasaki-shi,
Kanagawa 211, Japan
Tel: (044) 754-3753
FAX: (044) 754-3332

North and South America

FUJITSU MICROELECTRONICS, INC.
Semiconductor Division
3545 North First Street
San Jose, CA 95134-1804, USA
Tel: (408) 922-9000
FAX: (408) 432-9044/9045

Europe

FUJITSU MIKROELEKTRONIK GmbH
Am Siebenstein 6-10
63303 Dreieich-Buchschlag,
Germany
Tel: (06103) 690-0
FAX: (06103) 690-122

Asia Pacific

FUJITSU MICROELECTRONICS ASIA PTE LIMITED
No. 51 Bras Basah Road,
Plaza By The Park,
#06-04 to #06-07
Singapore 0718
Tel: 336-1600
FAX: 336-1609

I9502
© FUJITSU LIMITED Printed in Japan

3749756 0010366 918