# *** 2075 SERIES ***

MATERIAL:
* INSULATOR : PBT UL94V-0
* CONTACT : PHOSPHOR BRONZE
* SHELL : PHOSPHOR BRONZE

## ORDERING INFORMATION :

Part No. :

| 2075 | S | 0 | * | 0 | 4 | * | * |
|---|---|---|---|---|---|---|---|
| 1 | | 2 | 3 | 4 | 5 | 6 | 7 8 |

1. Series No.
2. S : SOCKET
3. 0 : Single stack
4. Plating:
   K : Slective 30 u" gold plated over 30~50 u" nickel
   R : Selective gold flash over 30u" Pd-Ni plated over 30~50u" nickel overall
   F : Slective 15 u" gold plated over 30~50 u" nickel
5. Type : 0 : A TYPE
6. Type : 4 : V TYPE
7. Color :
   0 : Beige
   1 : Black
   2 : White
8. L : LEOCO MARK M : NO MARK

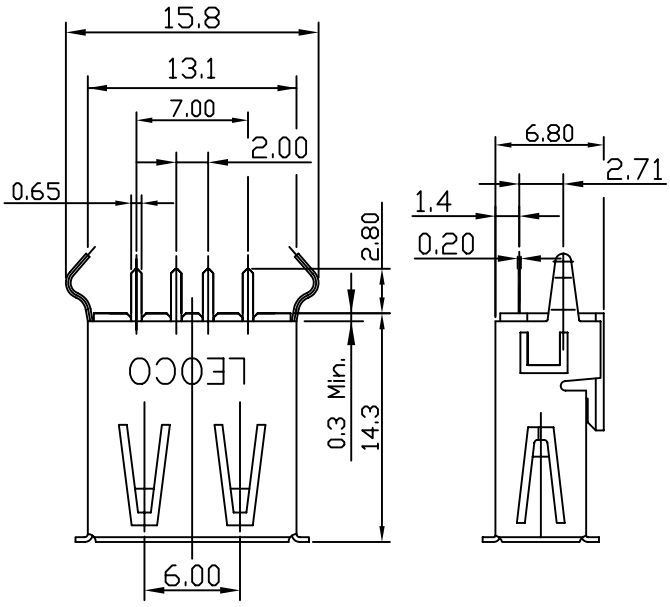


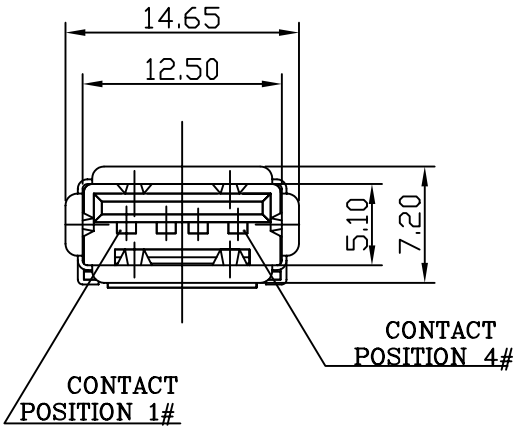


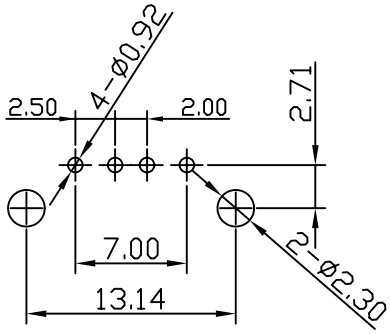


P.C.B. MOUNTING DIMENSIONS

| REV. | ECO. NO. | CHG | APPD. |
|---|---|---|---|
| C | ES010731 | | |
| B | ES010136 | | |
| A | DWG REL. | | |

LEOCO CORPORATION

GENERAL TOLERANCE

| | |
|---|---|
| X. ± | X° ± 2° |
| .X ± 0.30/.012 | .X° ± |
| .XX ± 0.20/.008 | .XX° ± |
| .XXX ± 0.10/.004 | .XXX° ± |

APPROVED:
DATE:
CHECKED:
DATE:
DRAW:
DATE:

PART NO.: 2075S0*04**

TITLE: USB A TYPE CONNECTOR

DRAWING NO.: 207533S

| UNITS | SCALE | SIZE | SHEET | REV. |
|---|---|---|---|---|
| mm | 2/1 | A4 | 1/1 | C |