DO NOT SCALE

PART NO 1206 5521

SYMBOL DEFINITION			MISSING NUMBERS
THE NUMBER INSIDE THE SYMBOL ( ) CORRESPONDS TO THE NUMBER ON THE INSPECTION REPORT FOR THIS DRAWING/PART NUMBER	TOTAL NO. OF SYMBOLS ON DRAWING	4	
	LAST NO. USED	4	

DATE	SYM	REVISION RECORD	AUTH	DR	CK
20JA99	-	ALL PARTS - REDRAWN AND			
		REVISED NOTES - REV			
		SYMBOLS ADVANCED	120292	JCO	MVA

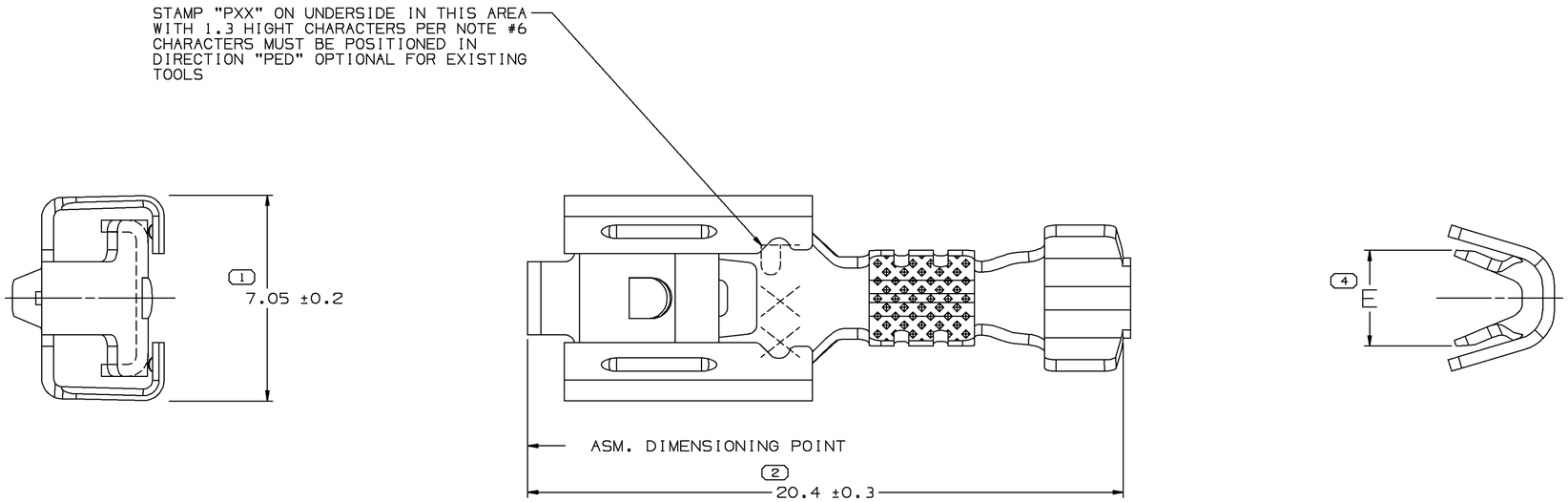

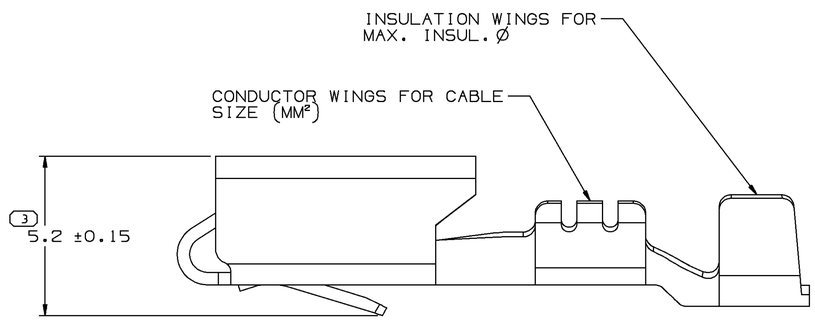

NOTES

1. UNLESS OTHERWISE SPECIFIED AND/OR INDICATED: DIMENSIONS ARE TO FACE OF VIEW SHOWN AND AUTOMATICALLY ROUNDED BY COMPUTER FOR INSPECTION. (SEE MATH MODEL FOR PRECISE DIMENSIONS.) FOR ALL OTHER DIMENSIONS NOT SHOWN BUT REQUIRED FOR TOOL BUILD, SEE MATH MODEL FOR PRECISE TOOL PATH DATA. ALL RADII 0.4
2. A R 0.4 MAX IS PERMISSIBLE ON ALL "SHARP" CORNERS UNLESS OTHERWISE SPECIFIED. ALL LOCKING FEATURES MUST HAVE SHARP CORNERS
3. TERMINALS WITH NIB TO HAVE A MAX. ENGAGE OF 35N AND A MIN. DISENGAGE OF 50N WHEN MATED TO BLADE WITH 2.36 ±0.08 Ø HOLE
4. RECOVERY NOTE - AFTER INSERTION INTO A 4.3 FUNCTIONAL GAGE, 5.4 TANG MUST RECOVER TO A MINIMUM OF 4.7
5. VISIBLE CRACKS ARE NOT PERMISSIBLE
6. "PXX" INDICATES "P" PLUS LAST TWO DIGITS OF MAKE SERIES NUMBERS (P01,P02,P03,ETC)

PART NO 1206 5521

12092584	C		0.406X33.73	S-1519445						0.8-0.5	19	3.12-2.03	301	3.2	**
PART NO	REV	STATUS	MAT'L SIZE	MAT'L SPEC	PART NO	REV	STATUS	MAT'L SIZE	MAT'L SPEC	SIZE (MM²)	ID	Ø	TYPE	E ±0.4	ANTI-ROTATION NIB
UNPLATED					PLATED					CABLE					

THE DIMENSION NUMBER(S) SHOWN BELOW INDICATE DIMENSIONS THAT ARE PROCESS SENSITIVE FOR PART PRODUCTION

1 | 3

DIMENSIONS ENCLOSED IN ( ) INDICATE REFERENCE DIMENSIONS AND NO TOLERANCE LIMITS ARE ESTABLISHED

DIMENSIONAL RANGE		
FROM	0	> 12
TO	12	
TOLERANCE UNLESS OTHERWISE SPECIFIED		
	±0.1	±0.2
ANGULAR TOLERANCE ± 2°		

PART DRAWING

Unigraphics

THIRD ANGLE PROJECTION

CODE NO 6900	QC	METRIC DIMENSIONS ARE IN MILLIMETERS UNLESS OTHERWISE SPECIFIED
DWG DATE 14MR86		
SCALE 10:1		DES
REFERENCE NO 001,701		DR J. C. ORTIZ 20JA99
		CK MANUEL VEGA 28JA99
		APPR
		VOL CM³

MATERIAL SPEC: SEE CHART

NAME: TERM F M/P 630

PART NUMBER: 1206 5521

SIZE: A1

SHEET 3

DELPHI PACKARD ELECTRIC SYSTEMS
WARREN, OHIO 44486