D

THIS DRAWING AND DESIGN HEREON CONSTITUTES A PROPRIETARY DESIGN OF PACKARD ELECTRIC DIVISION AND IS NOT TO BE DUPLICATED OR REPRODUCED WITHOUT AUTHORITY OF PACKARD ELECTRIC DIVISION.

DO NOT SCALE

PACKARD ELECTRIC DIVISION
GENERAL MOTORS CORPORATION
WARREN, OHIO

PART NO. 1211 0678

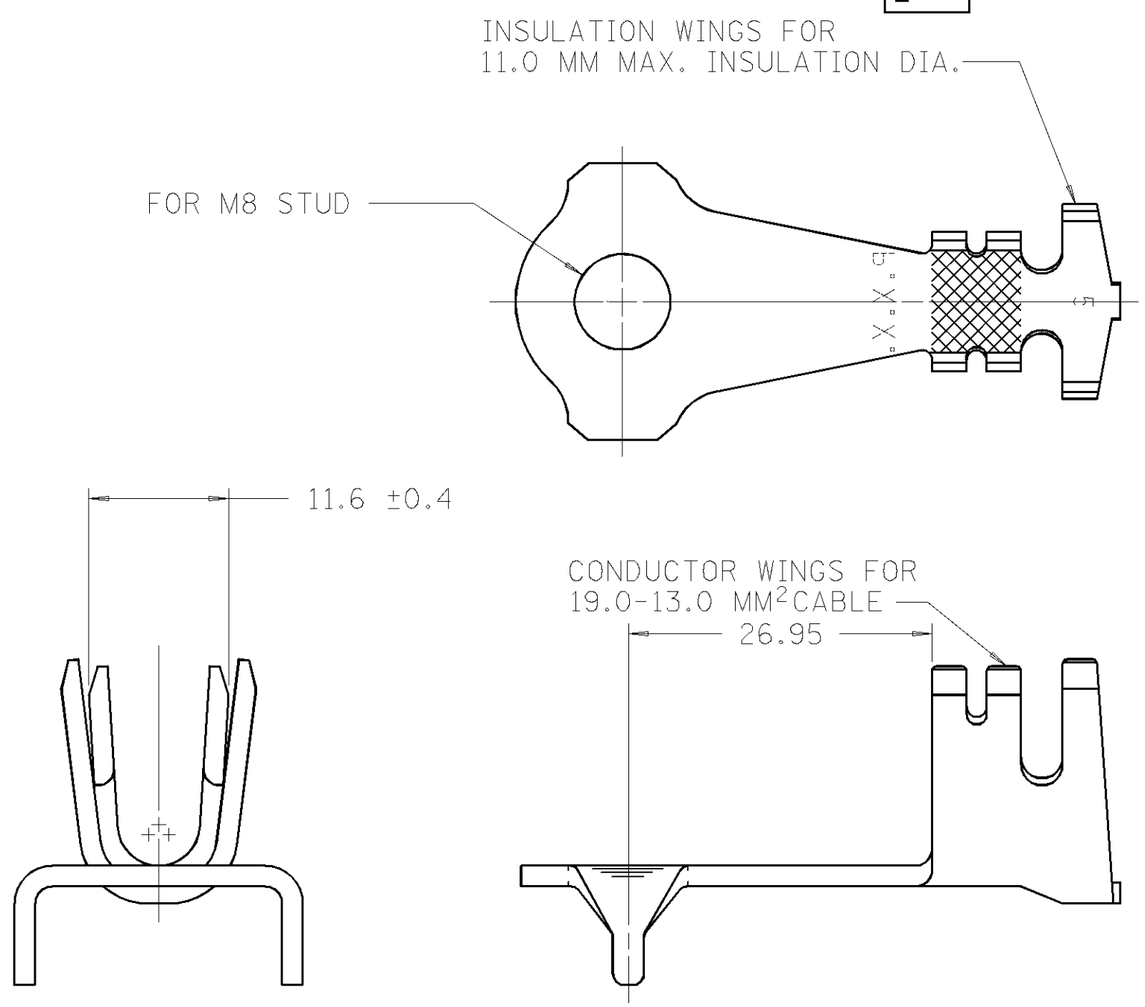

DATE	SYM	REVISION RECORD	AUTHORITY	DR	CK
16AP91	A	RELEASED TO REV "A"	910005	BPM	BPM
22FE93	—	"PXX" STAMP WAS PED	152980	TW	TW
11FE98	—	REVISED MAT'L SPEC	185783	GLH	GLH

PED/INTERGRAPH EMS

FILE SPEC: $$$$USER$$$$ DGN$SPECIFICATION$$$$$$$$$$$$ $$$$$SYTIME$$$$$$

THIRD ANGLE PROJECTION

METRIC
DIMENSIONS ARE IN MILLIMETERS UNLESS OTHERWISE SPECIFIED.

CODE NO. 6900

Q.C.

TOLERANCE UNLESS OTHERWISE SPECIFIED
DECIMAL: ONE PLACE ± 0.3 TWO PLACE ± 0.15
ANGULAR ± 2°

DWG. DATE 16AP91 | SCALE NONE | DR. BRIAN MADISON 16AP91

EST. NO. | CK. BRIAN MADISON | DATE 17AP91

REFERENCE NO. SHT #20 02973866 "E" SIZE | APPR. | DATE | APPR. | DATE

MATERIAL SPEC. M1598-174 1.542 THK 210 GILDING EX SPR SN PLTD

NAME BATT TERMINAL STRGHT RING

PART NO. 1211 0678
OUTLINE DRAWING

SIZE B

PACKARD ELECTRIC