CAD DRAWING - NO MANUAL REVISIONS

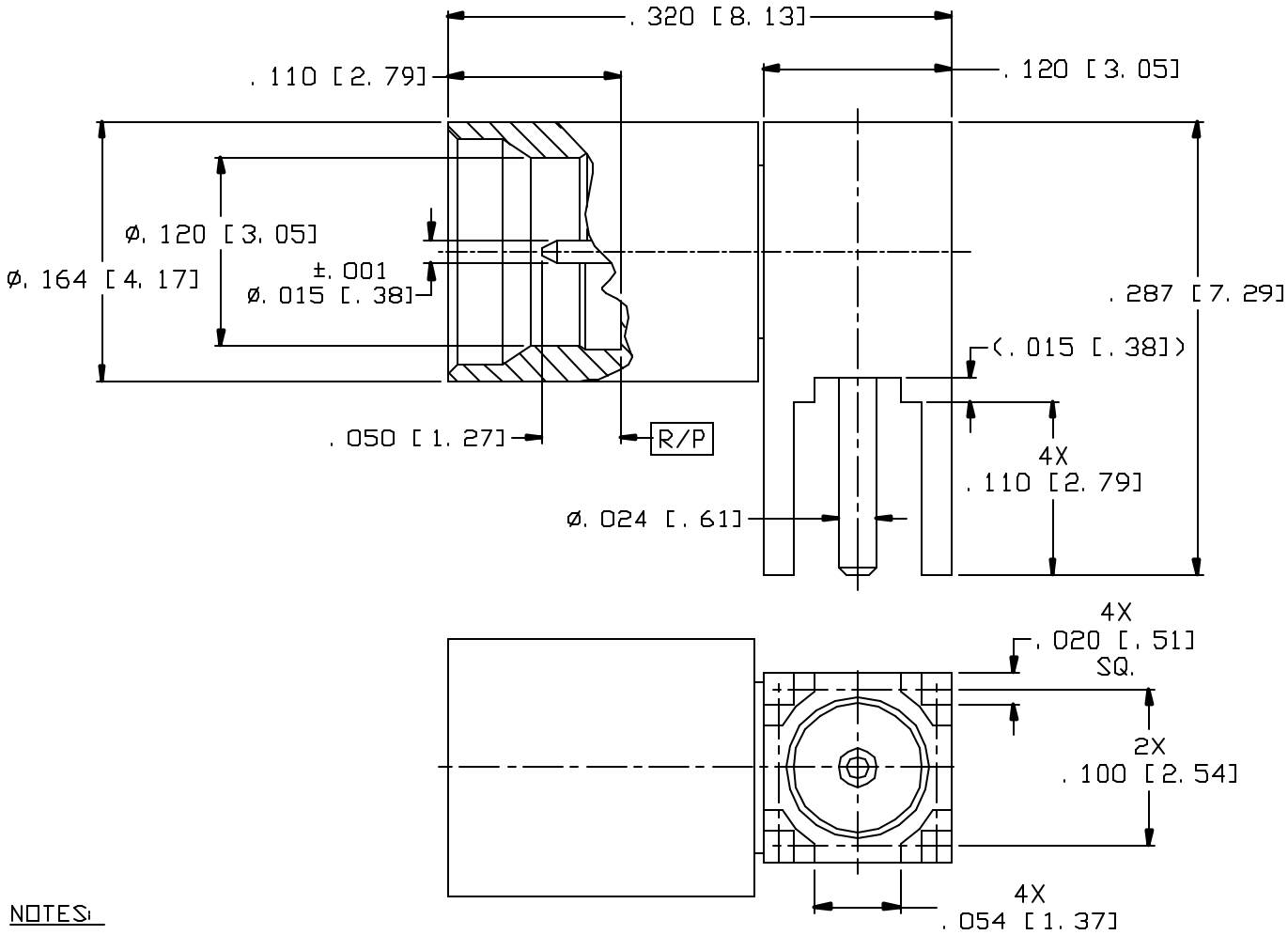

NOTES:

1. DESIGN AND INTERFACE PER I.D.S.-32.
2. PC BOARD LAYOUT PER DS-16E, FIGURE 5.

REV.	DESCRIPTION	DATE	APPR.
A	PER ECN 9636	11/18/08	JEM

PALCO CONNECTOR
22 GREAT HILL RD., NAUGATUCK, CT 06770
UNLESS OTHERWISE SPECIFIED, PALCO WORKMANSHIP STANDARDS APPLY
TOLERANCES ON: DECIMALS: XX ±.01 .XXX ±.005 ANGLES ±1/2° 32√
DIMENSIONS IN INCHES OR (METRIC) DO NOT SCALE PRINTS
CATALOG ITEM

DRAWN	CHECKED	ENGINEER	APPROVED	FSCM
ALS	JEM	ALS	JEM	58167

DESCRIPTION: SMP, PLUG, LIMITED DETENT R/A, PC MOUNT

DATE	DRAWING NO.	PLATING OPT.
09/04/08	32-2442-01	A