THIS DRAWING IS UNPUBLISHED. RELEASED FOR PUBLICATION AUG ,2006.
© COPYRIGHT – BY TYCO ELECTRONICS CORPORATION. ALL RIGHTS RESERVED.

LOC	DIST
DW	–

REVISIONS

P	LTR	DESCRIPTION	DATE	DWN	APVD
	D	REVISED. (ECR-10-026339)	23MAY11	JC	WK

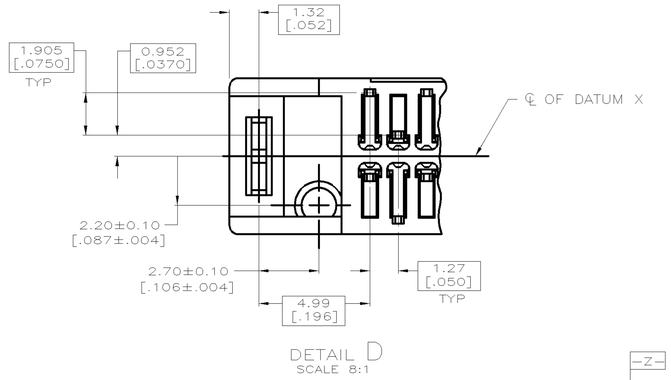

DETAIL D
SCALE 8:1

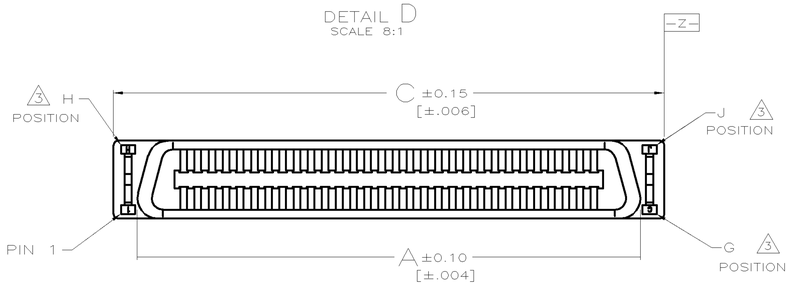

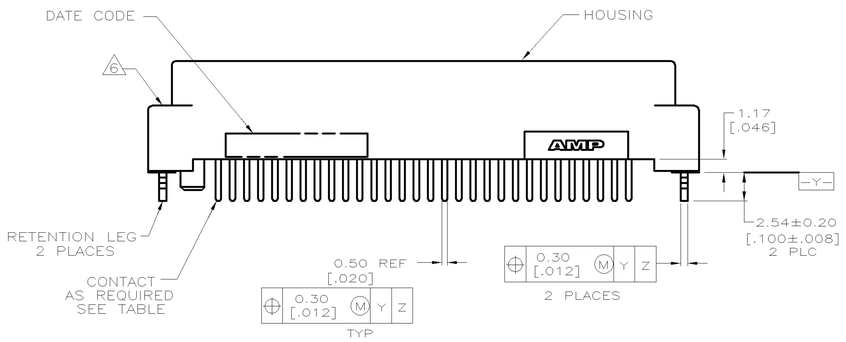

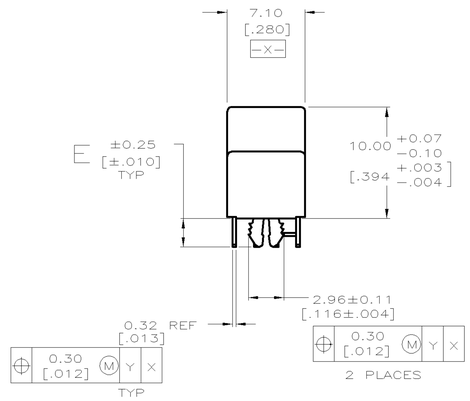

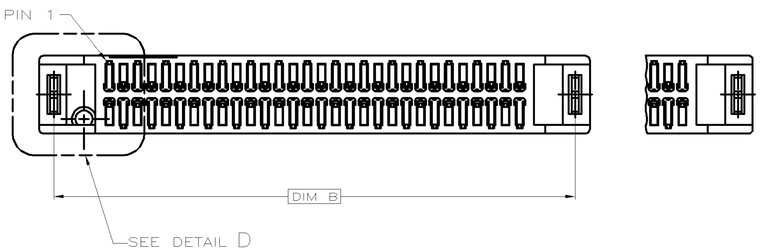

NOTE:
1. MATERIAL:
   HOUSING: LCP, MOLDING COMPOUND, UL 94V-0, BLACK COLOR.
   CONTACTS: PHOSPHOR BRONZE.
   BOARDLOCKS: BRASS.

2. FINISH:
   CONTACTS: (SEE TABLE) GOLD PLATED ON CONTACT AREA,
   3.81μm [150μ"] MIN. MATTE-TIN ON SOLDERTAIL,
   1.27μm [50μ"] MIN. NICKEL UNDERPLATED OVERALL.
   BOARDLOCKS: 3.81μm [150μ"] MIN. TIN-Cu OVER
   1.27μm [50μ"] MIN. UNDERPLATED.

3. G, J, H INDICATE NUMBER OF POSITION MARKED ON ASSEMBLY. ALSO SEE TABLE.

4. ALL DIMENSIONS SHOWN ARE MAXIMUM UNLESS OTHERWISE SPECIFIED.

5. RETENTION LEGS NOT PRESENT.

6. TOP OF RETENTION LEG MAY NOT PROTRUDE ABOVE THIS SURFACE.

7. HOUSING BOW UP TO 0.30 [.012] ALLOWED.

8. 60 POSITION AS SHOWN.

9. WAVE SOLDER CAPABLE TO 265°C PER TEST SPEC. 109-202, CONDITION B.

10. GOLD FLASH OVER
0.762μm [30μ"] MIN. PALLADIUM-NICKEL PLATED.

PCB THICKNESS	E	C	B	A	G 3	J 3	H 3	CONTACT PLATED	PART NUMBER	POS.
0.80-1.60 [.031-.063]	2.54 [.100]	125.65 [4.947]	123.01 [4.843]	121.37 [4.778]	90	180	91	GOLD FLASH	5-1734100-8	180
								0.381μm[15μ"]	3-1734100-8	
								10	1-1734100-8	
0.80-1.60 [.031-.063]	2.54 [.100]	112.95 [4.447]	110.31 [4.343]	108.67 [4.278]	80	160	81	GOLD FLASH	5-1734100-6	160
								0.381μm[15μ"]	3-1734100-6	
								10	1-1734100-6	
0.80-1.60 [.031-.063]	2.54 [.100]	93.90 [3.697]	91.26 [3.593]	89.62 [3.528]	65	130	66	GOLD FLASH	5-1734100-3	130
								0.381μm[15μ"]	3-1734100-3	
								10	1-1734100-3	
0.80-1.60 [.031-.063]	2.54 [.100]	87.55 [3.447]	84.91 [3.343]	83.27 [3.278]	60	120	61	GOLD FLASH	5-1734100-2	120
								0.381μm[15μ"]	3-1734100-2	
								10	1-1734100-2	
2.08 [.082]	3.17 [.125]	74.85 [2.947]	72.21 [2.843]	70.57 [2.778]	50	100	51	GOLD FLASH	5-1734100-1	100
								0.381μm[15μ"]	3-1734100-1	
								10	1-1734100-1	
0.80-1.60 [.031-.063]	2.54 [.100]	74.85 [2.947]	72.21 [2.843]	70.57 [2.778]	50	100	51	GOLD FLASH	5-1734100-0	
								0.381μm[15μ"]	3-1734100-0	
								10	1-1734100-0	
0.80-1.60 [.031-.063]	2.54 [.100]	62.15 [2.447]	59.51 [2.343]	57.87 [2.278]	40	80	41	GOLD FLASH	4-1734100-9	80 5
								0.381μm[15μ"]	2-1734100-9	
								10	1734100-9	
0.80-1.60 [.031-.063]	2.54 [.100]	62.15 [2.447]	59.51 [2.343]	57.87 [2.278]	40	80	41	GOLD FLASH	4-1734100-8	80
								0.381μm[15μ"]	2-1734100-8	
								10	1734100-8	
0.80-1.60 [.031-.063]	2.54 [.100]	54.53 [2.147]	57.89 [2.043]	50.25 [1.978]	34	68	35	GOLD FLASH	4-1734100-7	68
								0.381μm[15μ"]	2-1734100-7	
								10	1734100-7	
0.80-1.60 [.031-.063]	2.54 [.100]	49.45 [1.947]	45.81 [1.843]	45.17 [1.778]	30	60	31	GOLD FLASH	4-1734100-6	60
								0.381μm[15μ"]	2-1734100-6	
								10	1734100-6	
2.08 [.082]	3.17 [.125]	43.10 [1.697]	40.46 [1.593]	38.82 [1.528]	25	50	26	GOLD FLASH	5-1734100-9	50
								0.381μm[15μ"]	3-1734100-9	
								10	1-1734100-9	
0.80-1.60 [.031-.063]	2.54 [.100]	43.10 [1.697]	40.46 [1.593]	38.82 [1.528]	25	50	26	GOLD FLASH	4-1734100-5	
								0.381μm[15μ"]	2-1734100-5	
								10	1734100-5	
0.80-1.60 [.031-.063]	2.54 [.100]	36.75 [1.447]	34.11 [1.343]	32.47 [1.278]	20	40	21	GOLD FLASH	4-1734100-4	40
								0.381μm[15μ"]	2-1734100-4	
								10	1734100-4	
0.80-1.60 [.031-.063]	2.54 [.100]	30.40 [1.197]	27.76 [1.093]	26.12 [1.025]	15	30	16	GOLD FLASH	4-1734100-3	30
								0.381μm[15μ"]	2-1734100-3	
								10	1734100-3	
2.08 [.082]	3.17 [.125]	24.05 [.947]	21.41 [.843]	19.77 [.778]	10	20	11	GOLD FLASH	4-1734100-2	20
								0.381μm[15μ"]	2-1734100-2	
								10	1734100-2	

THIS DRAWING IS A CONTROLLED DOCUMENT.

DIMENSIONS: MM

TOLERANCES UNLESS OTHERWISE SPECIFIED:
0 PLC ± –
1 PLC ± –
2 PLC ± – 4
3 PLC ± –
4 PLC ± –
ANGLES ± –

MATERIAL: SEE NOTE
FINISH: SEE NOTE

DWN F. YANG 31MAR2009
CHK S. CHIEN 31MAR2009
APVD W. KODAMA 31MAR2009
PRODUCT SPEC 108-57876
QUALIFICATION TEST REPORT –
WEIGHT –

TE Connectivity

NAME
PLUG ASSEMBLY, VERTICAL BOARD-TO-BOARD, CHAMP .050, SERIES I

SIZE	CAGE CODE	DRAWING NO	RESTRICTED TO
A3	00779	C-1734100	–

CUSTOMER DRAWING | SCALE – | SHEET 1 OF 4 | REV D

THIS DRAWING IS UNPUBLISHED. RELEASED FOR PUBLICATION AUG ,2006.
© COPYRIGHT – BY TYCO ELECTRONICS CORPORATION. ALL RIGHTS RESERVED.

LOC	DIST
DW	—

REVISIONS

P	LTR	DESCRIPTION	DATE	DWN	APVD
		SEE SHEET 1.			

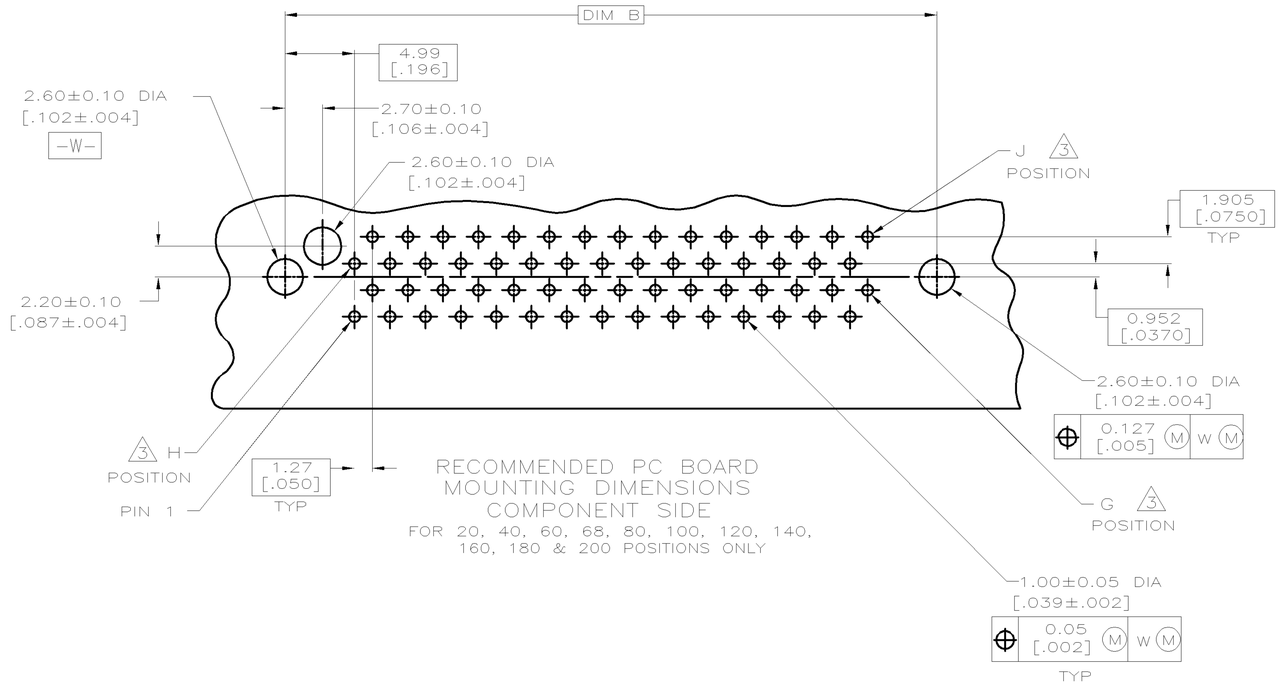

RECOMMENDED PC BOARD
MOUNTING DIMENSIONS
COMPONENT SIDE
FOR 20, 40, 60, 68, 80, 100, 120, 140,
160, 180 & 200 POSITIONS ONLY

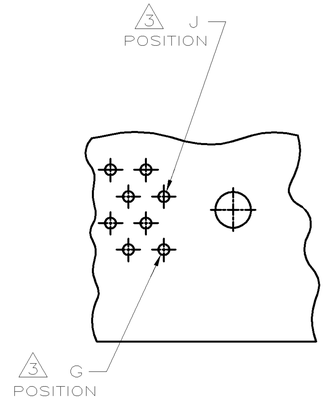

FOR 50 AND 130
POSITIONS ONLY

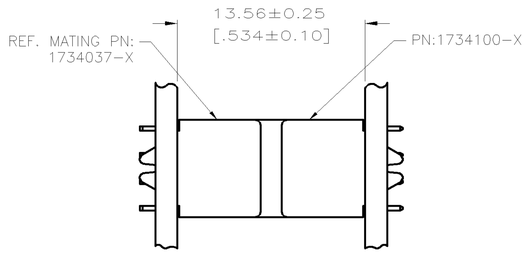

VERTICAL PLUG ASSEMBLY MATED
TO VERTICAL RECEPTACLE ASSEMBLY

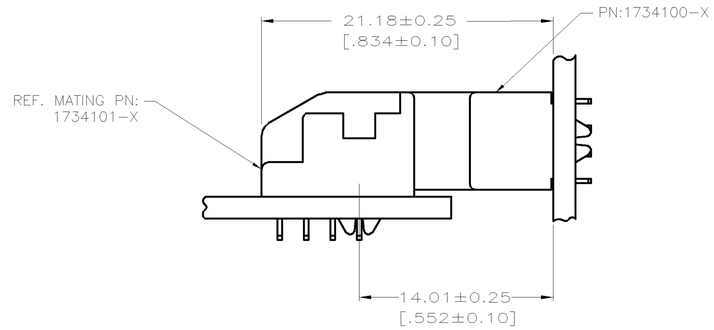

VERTICAL PLUG ASSEMBLY MATED
TO RIGHT ANGLE RECEPTACLE ASSEMBLY

THIS DRAWING IS A CONTROLLED DOCUMENT.

DIMENSIONS: MM

TOLERANCES UNLESS OTHERWISE SPECIFIED:
0 PLC ± –
1 PLC ± –
2 PLC ± –
3 PLC ± –
4 PLC ± –
ANGLES ± –

MATERIAL –
FINISH –

DWN
CHK
APVD
PRODUCT SPEC
QUALIFICATION TEST REPORT
WEIGHT

TE Connectivity

NAME
PLUG ASSEMBLY, VERTICAL
BOARD-TO-BOARD,
CHAMP .050, SERIES I

SIZE	CAGE CODE	DRAWING NO	RESTRICTED TO
A3	00779	C-1734100	—

CUSTOMER DRAWING | SCALE — | SHEET 2 OF 4 | REV D

THIS DRAWING IS UNPUBLISHED. RELEASED FOR PUBLICATION AUG ,2006.
© COPYRIGHT – BY TYCO ELECTRONICS CORPORATION. ALL RIGHTS RESERVED.

LOC	DIST
DW	—

REVISIONS

P	LTR	DESCRIPTION	DATE	DWN	APVD
		SEE SHEET 1.			

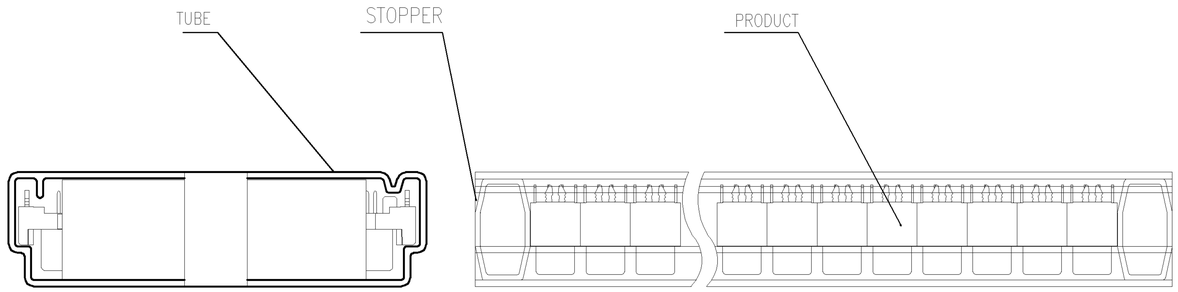

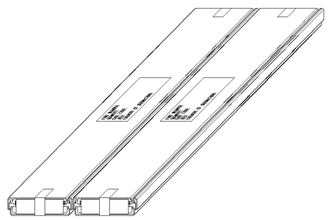

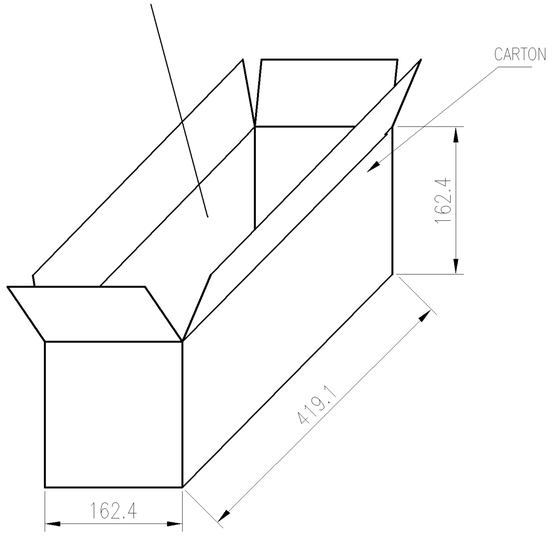

G.W./CARTON (KG)	N.W./CARTON (KG)	PCS/TUBE	TUBES/CARTON	QUANTITY/CARTON (PCS)	PART NUMBER	POS.
4.88	3.42	54	8	432	5–1734100–2	120
					3–1734100–2	
					1–1734100–2	
7.70	5.58	54	16	864	5–1734100–0	100
					3–1734100–0	
					1–1734100–0	
5.28	3.80	54	16	864	4–1734100–9	80
					2–1734100–9	
					1734100–9	
5.38	3.90				4–1734100–8	
					2–1734100–8	
					1734100–8	
4.76	3.37	54	16	864	4–1734100–7	68
					2–1734100–7	
					1734100–7	
4.36	3.11	54	16	864	4–1734100–6	60
					2–1734100–6	
					1734100–6	
5.72	4.08	54	24	1296	5–1734100–9	50
					3–1734100–9	
					1–1734100–9	
5.70	4.07				4–1734100–5	
					2–1734100–5	
					1734100–5	
4.77	3.50	54	24	1296	4–1734100–4	40
					2–1734100–4	
					1734100–4	
4.46	3.03	54	24	1296	4–1734100–3	30
					2–1734100–3	
					1734100–3	

THIS DRAWING IS A CONTROLLED DOCUMENT.

DIMENSIONS: MM

TOLERANCES UNLESS OTHERWISE SPECIFIED:
0 PLC ± –
1 PLC ± –
2 PLC ± –
3 PLC ± –
4 PLC ± –
ANGLES ± –

MATERIAL –

FINISH –

DWN
CHK
APVD
PRODUCT SPEC —
QUALIFICATION TEST REPORT —
WEIGHT —

TE Connectivity

NAME
PLUG ASSEMBLY, VERTICAL BOARD–TO–BOARD, CHAMP .050, SERIES I

SIZE	CAGE CODE	DRAWING NO	RESTRICTED TO
A3	00779	C–1734100	—

CUSTOMER DRAWING | SCALE — | SHEET 3 OF 4 | REV D

THIS DRAWING IS UNPUBLISHED. RELEASED FOR PUBLICATION AUG ,2006.
© COPYRIGHT – BY TYCO ELECTRONICS CORPORATION. ALL RIGHTS RESERVED.

LOC	DIST
DW	—

REVISIONS

P	LTR	DESCRIPTION	DATE	DWN	APVD
		SEE SHEET 1.			

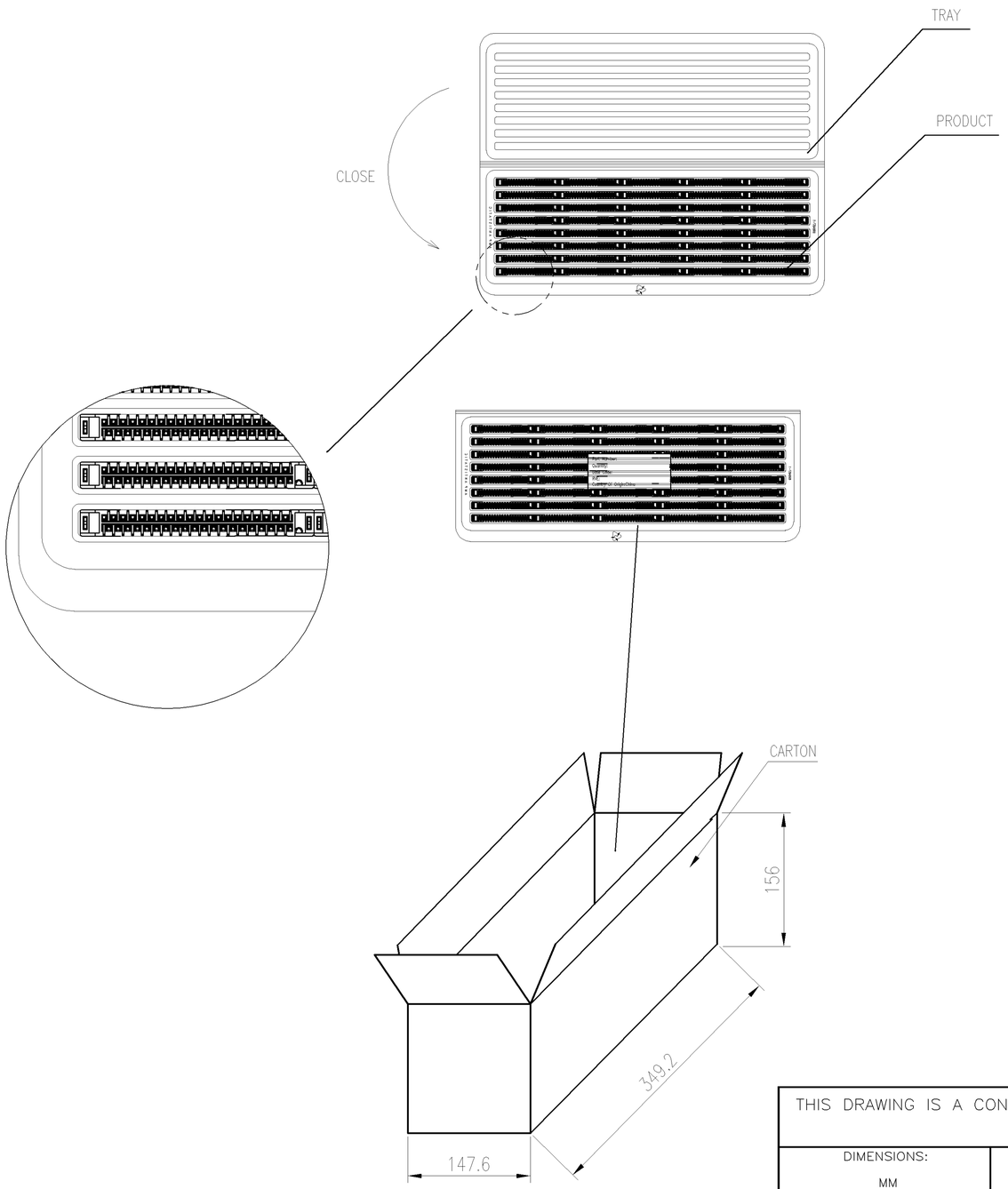

G.W./CARTON (KG)	N.W./CARTON (KG)	PCS/TRAY	TRAYS/CARTON	QUANTITY/CARTON (PCS)	PART NUMBER	POS.
2.85	1.97	16	10	160	5-1734100-8	180
					3-1734100-8	
					1-1734100-8	
2.62	1.73	16	10	160	5-1734100-6	160
					3-1734100-6	
					1-1734100-6	

THIS DRAWING IS A CONTROLLED DOCUMENT.

DIMENSIONS: MM

TOLERANCES UNLESS OTHERWISE SPECIFIED:
0 PLC ± –
1 PLC ± –
2 PLC ± –
3 PLC ± –
4 PLC ± –
ANGLES ± –

MATERIAL –

FINISH –

DWN
CHK
APVD
PRODUCT SPEC —
QUALIFICATION TEST REPORT —
WEIGHT —

TE Connectivity

NAME
PLUG ASSEMBLY, VERTICAL BOARD-TO-BOARD, CHAMP .050, SERIES I

SIZE	CAGE CODE	DRAWING NO	RESTRICTED TO
A3	00779	C-1734100	—

CUSTOMER DRAWING | SCALE — | SHEET 4 OF 4 | REV D