Preliminary

1M x 4 10/10 QUAD CAS EDO DRAM

Features

- 1,048,576 word by 4 bit organization
- QUAD $\overline{CAS}$ Parity
- Extended Data Out (Hyper Page) Mode
- 1024 Refresh Cycles
  - 16 ms Refresh Rate (SP version)
  - 128 ms Refresh Rate (LP version)
- High Performance:

Parameter		-60	-70
t_{RAC}	$\overline{RAS}$ Access Time	60 ns	70 ns
t_{CAC}	$\overline{CAS}$ Access Time	15 ns	18 ns
t_{AA}	Column Address Access Time	30 ns	35 ns
t_{RC}	Cycle Time	104 ns	124 ns
t_{HPC}	EDO (Hyper Page) Mode Cycle Time	25 ns	30 ns

- Power Supply: 3.3V ± 0.3V or 5.0V ± 0.5V
- Standard Power (SP) and Low Power (LP)
- Low Power Dissipation
  - Active (max)
    - 95 mA / 80 mA (3.3V)
    - 85 mA / 70 mA (5.0V)
  - Standby Current: TTL Inputs (max)
    - 2.0 mA (SP version)
    - 1.0 mA (LP version)
  - Standby Current: CMOS Inputs (max)
    - 1.0 mA (SP version)
    - 0.15 mA (LP version)
- $\overline{RAS}$ Only, $\overline{CAS}$ before $\overline{RAS}$, Hidden Refreshing
- Self Refresh (LP version only)
- Packages: SOJ-26/24 (300mil)
  TSOP-26/24 (300mil)

Description

The IBM014445 is a Quad $\overline{CAS}$ Extended Data Out Mode dynamic RAM organized 1,048,576 words by 4 bits. Each of the four $\overline{CAS}$ pins uniquely controls the write operation to a corresponding I/O pin, much in the same manner as the write per bit function. This device was designed with memory parity systems in mind and can be a cost effective solution in that it replaces four 1M x 1 or two 2M x 2 DRAM devices. The devices are fabricated in IBM's 4M-bit Shrink 3 CMOS silicon gate technology. The circuits and process have been designed to provide high performance, low power dissipation, and high reliability. The devices operate with a 5.0V ± 0.5V or 3.3V ± 0.3V power supply and are offered in a plastic 26/24 pin 300mil SOJ or TSOP package. Refreshing may be accomplished by means of a $\overline{CAS}$ before $\overline{RAS}$ refresh cycle (CBR) that internally generates the refresh address. $\overline{RAS}$ - only refresh cycles can also refresh all memory locations. Self-Refresh mode is included as a standard feature for the Low Power devices (IBM014445M and IBM014445P). All low power devices support Extended Data Retention of 128 ms, eight times (8x) the retention supported by IBM's standard power devices.

Pin Assignments

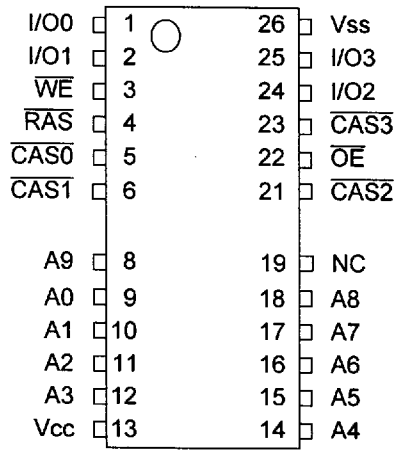

Pin Description

A0 - A9	Address Input
I/O0 - I/O3	Data Input/Output
$\overline{RAS}$	Row Address Strobe
$\overline{CAS0}$ - $\overline{CAS3}$	Column Address Strobe
$\overline{WE}$	Read/Write Enable
$\overline{OE}$	Output Enable
V_{CC}	Power (5.0 V or 3.3V)
V_{SS}	Ground

77H9921
SA14-4246-00
Revised 2/96

©IBM Corporation, 1996. All rights reserved.
Use is further subject to the provisions at the end of this document.

9006146 0003033 9T7

Ordering Information

Part Number	SP / LP	Self Refresh	Power Supply	Speed	Package	Notes
IBM014445J1 -60	SP	No	5.0V	60ns	300mil SOJ 26/24	1
IBM014445J1 -70	SP	No	5.0V	70ns	300mil SOJ 26/24	1
IBM014445BJ1 -60	SP	No	3.3V	60ns	300mil SOJ 26/24	1
IBM014445BJ1 -70	SP	No	3.3V	70ns	300mil SOJ 26/24	1
IBM014445MJ1 -60	LP	Yes	5.0V	60ns	300mil SOJ 26/24	1
IBM014445MJ1 -70	LP	Yes	5.0V	70ns	300mil SOJ 26/24	1
IBM014445PJ1 -60	LP	Yes	3.3V	60ns	300mil SOJ 26/24	1
IBM014445PJ1 -70	LP	Yes	3.3V	70ns	300mil SOJ 26/24	1
IBM014445MT1 -60	LP	Yes	5.0V	60ns	300mil TSOP 26/24	1
IBM014445MT1 -70	LP	Yes	5.0V	70ns	300mil TSOP 26/24	1
IBM014445PT1 -60	LP	Yes	3.3V	60ns	300mil TSOP 26/24	1
IBM014445PT1 -70	LP	Yes	3.3V	70ns	300mil TSOP 26/24	1

1. SP = Standard Power version (IBM014445 and IBM014445B); LP = Low Power version (IBM014445M and IBM014445P)

©IBM Corporation, 1996. All rights reserved.
Use is further subject to the provisions at the end of this document.

9006146 0003034 833

Block Diagram

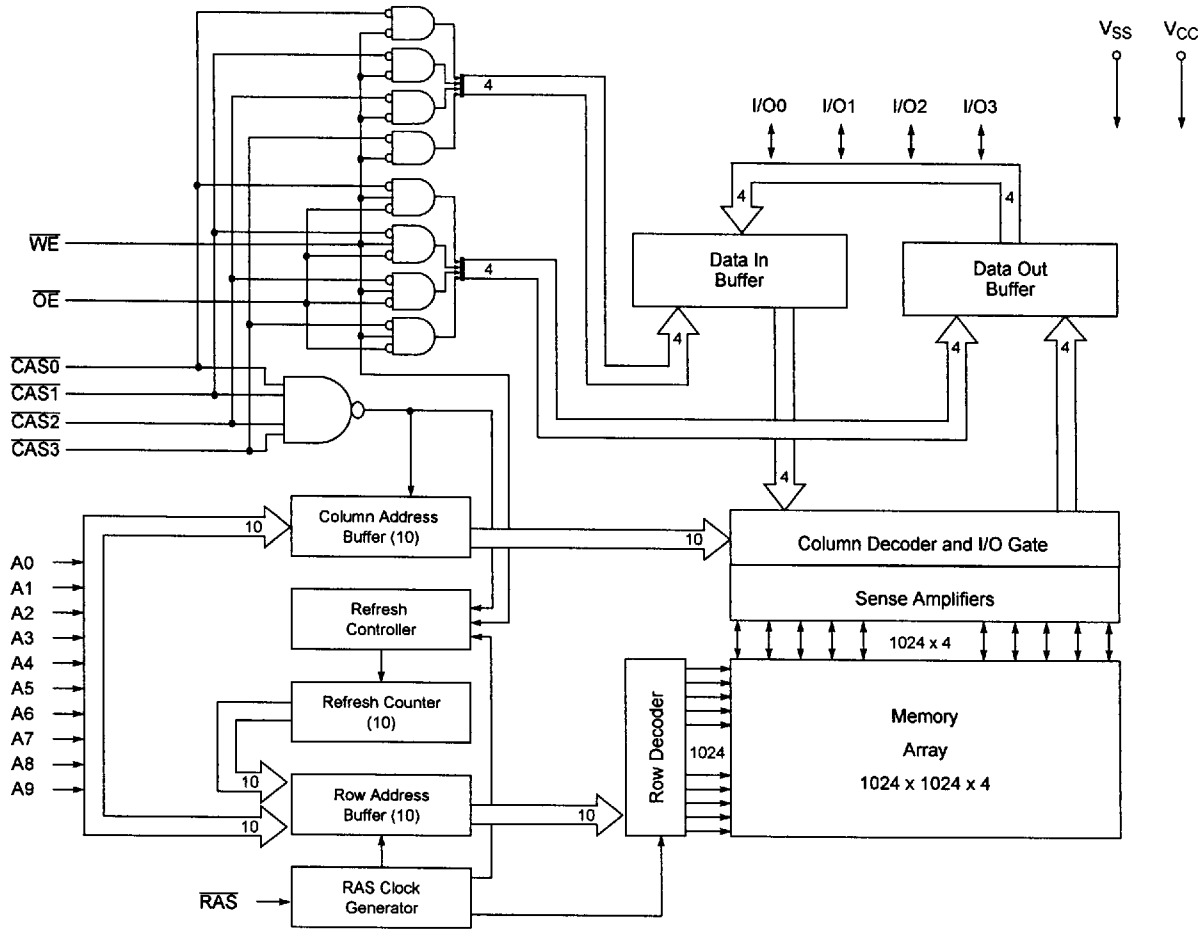

©IBM Corporation, 1996. All rights reserved.
Use is further subject to the provisions at the end of this document.

9006146 0003035 77T

Truth Table

Function		$\overline{RAS}$	$\overline{CAS}$	$\overline{WE}$	$\overline{OE}$	Row Address	Col. Address	I/O0 - I/O3
Standby		H	H→X	X	X	X	X	High Impedance
Read		L	L	H	L	Row	Col.	Data Out
Early-Write		L	L	L	X	Row	Col.	Data In
Delayed-Write		L	L	H→L	H	Row	Col.	Data In
Read-Modify-Write		L	L	H→L	L→H	Row	Col.	Data Out, Data In
Extended Data Out (Hyper Page) Mode Read	1st Cycle	L	H→L	H	L	Row	Col.	Data Out
	2nd Cycle	L	H→L	H	L	N/A	Col.	Data Out
Extended Data Out (Hyper Page) Mode Write	1st Cycle	L	H→L	L	X	Row	Col.	Data In
	2nd Cycle	L	H→L	L	X	N/A	Col.	Data In
Extended Data Out (Hyper Page) Mode Read-Modify-Write	1st Cycle	L	H→L	H→L	L→H	Row	Col.	Data Out, Data In
	2nd Cycle	L	H→L	H→L	L→H	N/A	Col.	Data Out, Data In
$\overline{RAS}$-Only Refresh		L	H	X	X	Row	N/A	High Impedance
$\overline{CAS}$-Before-$\overline{RAS}$ Refresh		H→L	L	H	X	X	N/A	High Impedance
Hidden Refresh Read		L→H→L	L	H	L	Row	Col.	Data Out
Hidden Refresh Write		L→H→L	L	H	X	Row	Col.	Data In
Self Refresh (LP version only)		H→L	L	L	H	X	X	X

©IBM Corporation, 1996. All rights reserved.
Use is further subject to the provisions at the end of this document.

9006146 0003036 606

Absolute Maximum Ratings

Symbol	Parameter	Rating		Units	Notes
		3.3 Volt Device	5.0 Volt Device		
V_{CC}	Power Supply Voltage	-0.5 to +4.1	-1.0 to +6.0	V	1
V_{IN}	Input Voltage	-0.5 to min (V_{CC}+0.5, 4.1)	-0.5 to min (V_{CC}+0.5, 6.0)	V	1
V_{OUT}	Output Voltage	-0.5 to min (V_{CC}+0.5, 4.1)	-0.5 to min (V_{CC}+0.5, 6.0)	V	1
T_A	Operating Temperature	0 to +70	0 to +70	°C	1
T_{STG}	Storage Temperature	-55 to +150	-55 to +150	°C	1
P_D	Power Dissipation	1.0	1.0	W	1
I_{OUT}	Short Circuit Output Current	20	50	mA	1

1. Stresses greater than those listed under "Absolute Maximum Ratings" may cause permanent damage to the device. This is a stress rating only and functional operation of the device at these or any other conditions above those indicated in the operational sections of this specification is not implied. Exposure to absolute maximum rating conditions for extended periods may affect reliability.

Recommended DC Operating Conditions (T_A=0 to 70°C)

Symbol	Parameter	3.3 Volt Device			5.0 Volt Device			Units	Notes
		Min.	Typ.	Max.	Min.	Typ.	Max.		
V_{CC}	Supply Voltage	3.0	3.3	3.6	4.5	5.0	5.5	V	1
V_{IH}	Input High Voltage	2.0	—	V_{CC} + 0.3	2.4	—	V_{CC} + 0.5	V	1
V_{IL}	Input Low Voltage	-0.3	—	0.8	-0.5	—	0.8	V	1

1. All voltages referenced to V_{SS}=0V.

Capacitance (T_A=25°C, f=1MHz, V_{CC}= 3.3V ± 0.3V or V_{CC}= 5.0V ± 0.5V)

Symbol	Parameter	Min.	Max	Units	Notes
C_{I1}	Input Capacitance (Addresses)	—	5	pF	1
C_{I2}	Input Capacitance ($\overline{RAS}$, $\overline{CAS}$, $\overline{WE}$, $\overline{OE}$)	—	7	pF	1
C_O	Output Capacitance (I/O's)	—	7	pF	1

1. Input capacitance measurements made with rise time shift method with $\overline{RAS}$ and $\overline{CAS}$ = V_{IH} to disable output.

©IBM Corporation, 1996. All rights reserved.
Use is further subject to the provisions at the end of this document.

9006146 0003037 542

DC Electrical Characteristics (T_A= 0 to +70 C, V_{CC}= 3.3V ± 0.3V or V_{CC}= 5.0V ± 0.5V)

Symbol	Parameter		3.3 Volt Device		5.0 Volt Device		Units	Notes
			Min.	Max.	Min.	Max.		
I_{CC1}	Operating Current Average Power Supply Operating Current ($\overline{RAS}$ and $\overline{CAS}$ Cycling: t_{RC} = t_{RC} min.)	-60	—	95	—	85	mA	1,2,3,4
		-70	—	80	—	70		
I_{CC2}	Standby Current (TTL) Power Supply Standby Current ($\overline{RAS}$ = $\overline{CAS}$ ≥ V_{IH} min)	SP version	—	2.0	—	2.0	mA	4
		LP version	—	1.0	—	1.0		
I_{CC3}	$\overline{RAS}$ Only Refresh Current Average Power Supply Current, $\overline{RAS}$ Only Mode ($\overline{RAS}$ Cycling, $\overline{CAS}$ ≥ V_{IH} min: t_{RC} = t_{RC} min)	-60	—	95	—	85	mA	1,3,4
		-70	—	80	—	70		
I_{CC4}	Extended Data Out (Hyper Page) Mode Current Average Power Supply Current, EDO Mode ($\overline{RAS}$ = V_{IL} min, $\overline{CAS}$ Cycling, t_{HPC} = t_{HPC} min)	-60	—	65	—	60	mA	1,2,3,4
		-70	—	65	—	60		
I_{CC5}	Standby Current (CMOS) Power Supply Standby Current ($\overline{RAS}$ = $\overline{CAS}$ ≥ V_{IH})	SP version	—	1.0	—	1.0	mA	5, 6
		LP version	—	0.15	—	0.15		
I_{CC6}	$\overline{CAS}$ Before $\overline{RAS}$ Refresh Current Average Power Supply Current, $\overline{CAS}$ Before $\overline{RAS}$ Mode ($\overline{RAS}$ Cycling, $\overline{CAS}$ before $\overline{RAS}$, t_{RC} = t_{RC} min)	-60	—	95	—	85	mA	1,3,4,7
		-70	—	80	—	70		
I_{CC7}	Self Refresh Current, LP version only Average Power Supply Current during Self Refresh (CBR cycle with $\overline{RAS}$ ≥ t_{RASS} (min))		—	170	—	170	µA	5,6
I_{CC8}	Battery Backup Refresh Current, LP version only Average Power Supply Current during Battery Backup refresh ($\overline{CAS}$ ≤V_{IL}, $\overline{WE}$ ≥V_{IH}, t_{RAS}≤ 1µSec, t_{RC}=125µSec)		—	300	—	300	µA	5,6,8
I_{CC9}	Standby Current Standby current with Output's enabled ($\overline{RAS}$ ≥ V_{IH} (min) and $\overline{CAS}$ ≤ V_{IL} (max))		—	5	—	5	mA	4,9
$I_{I(L)}$	Input Leakage Current, any input (0.0 ≤ V_{IN} ≤ (V_{CC} + 1.0V)) for 5.0V, or (0.0 ≤ V_{IN} ≤ (V_{CC} + 0.3V)) for 3.3V. All Other Pins Not Under Test = 0V		-10	+10	-10	+10	µA	
$I_{O(L)}$	Output Leakage Current (D_{OUT} is disabled, 0.0 ≤ V_{OUT} ≤ V_{CC} max)		-10	+10	-10	+10	µA	
V_{OH}	Output Level (TTL) Output "H" Level Voltage (I_{OUT} = -5mA for 5.0V, or I_{OUT} = -2mA for 3.3V)		2.4	V_{CC}	2.4	V_{CC}	V	
V_{OL}	Output Level (TTL) Output "L" Level Voltage (I_{OUT} = +4.2mA for 5.0V, or I_{OUT} = +2mA for 3.3V)		0.0	0.4	0.0	0.4	V	

1. I_{CC1}, I_{CC3}, I_{CC4} and I_{CC6} depend on cycle rate.
2. I_{CC1} and I_{CC4} depend on output loading. Specified values are obtained with the outputs open.
3. Column address can be changed once or less while $\overline{RAS}$ =V_{IL} and $\overline{CAS}$ =V_{IH}.
4. All I/O and other input pins must be≤ V_{IL}(max) or ≥V_{IH}(min).
5. ((V_{CC}-0.2V ≤ V_{IH} ≤ V_{CC}+0.5V) and (0.0V ≤ V_{IL} ≤ 0.2V)) for 5.0V, or ((V_{CC}-0.2V ≤ V_{IH} ≤ V_{CC}+0.3V) and (0.0V ≤ V_{IL} ≤ 0.2V)) for 3.3V.
6. All other I/O and other inputs at V_{IH} or V_{IL}.
7. Enables on-chip refresh and address counters.
8. 1024 rows at 128µs = 128ms.
9. Assumes no resistive loads on I/O pins.

©IBM Corporation, 1996. All rights reserved.
Use is further subject to the provisions at the end of this document.

9006146 0003038 489

AC Characteristics (T_A=0 to +70°C)

1. An initial pause of 100µs is required after power-up followed by 8 $\overline{RAS}$ only refresh cycles or 8 $\overline{CAS}$ before $\overline{RAS}$ refresh cycles.
2. AC measurements assume t_T=2ns.
3. V_{IH}(min) and V_{IL}(max) are reference levels for measuring timing of input signals. Also, transition times are measured between V_{IH} and V_{IL} (or between V_{IL} and V_{IH}).
4. In addition to meeting the transition rate specification, all input signals must transit between V_{IH} and V_{IL} (or between V_{IL} and V_{IH}) in a monotonic manner.
5. If $\overline{OE}$ is tied permanently low, Late-Write or Read-Modify-Write operations are not possible.
6. If both $\overline{RAS}$ and $\overline{CAS}$ = V_{IH}, then the data I/O's will be high impedance.
7. If $\overline{CAS}$ = V_{IL}, then the data I/O's may contain data from the last valid Read cycle.
8. Measured with a load equivalent to 2 TTL loads and 100pF.

Read, Write, Read-Modify-Write and Ref. Cycles (Common Parameters)

Symbol	Parameter	-60		-70		Units	Notes
		Min.	Max.	Min.	Max.		
t_{RC}	Random Read or Write Cycle Time	104	—	124	—	ns	
t_{RP}	$\overline{RAS}$ Precharge Time	40	—	50	—	ns	
t_{CP}	$\overline{CAS}$ Precharge Time	10	—	10	—	ns	2,2
t_{RAS}	$\overline{RAS}$ Pulse Width	60	10K	70	10K	ns	
t_{CAS}	$\overline{CAS}$ Pulse Width	10	10K	12	10K	ns	3
t_{ASR}	Row Address Setup Time	0	—	0	—	ns	
t_{RAH}	Row Address Hold Time	10	—	10	—	ns	
t_{ASC}	Column Address Setup Time	0	—	0	—	ns	4
t_{CAH}	Column Address Hold Time	10	—	10	—	ns	4
t_{RCD}	$\overline{RAS}$ to $\overline{CAS}$ Delay Time	14	45	14	50	ns	4,5
t_{RAD}	$\overline{RAS}$ to Column Address Delay Time	12	30	12	35	ns	6
t_{RSH}	$\overline{RAS}$ Hold Time	10	—	12	—	ns	7
t_{CSH}	$\overline{CAS}$ Hold Time	50	—	55	—	ns	8
t_{CRP}	$\overline{CAS}$ to $\overline{RAS}$ Precharge Time	5	—	5	—	ns	8
t_{CLCH}	Last $\overline{CAS}$ Going Low to First $\overline{CAS}$ to Return High	10	—	10	—	ns	9
t_{OED}	$\overline{OE}$ to D_{IN} Delay Time	15	—	20	—	ns	10

1. Last rising $\overline{CASx}$ edge to first falling $\overline{CASx}$ edge.
2. If $\overline{CASx}$ is Low at the falling edge of $\overline{RAS}$, the corresponding I/Ox output will be maintained from the previous cycle. To initiate a new cycle and clear the I/O buffers, $\overline{CAS}$ must be pulsed High for t_{CP}
3. Each $\overline{CASx}$ must meet the minimum pulse width.
4. The first $\overline{CASx}$ edge to transition low.
5. Operation within the t_{RCD}(max) limit ensures that t_{RAC}(max) can be met. t_{RCD}(max) is specified as a reference point only. If t_{RCD} is greater than the specified t_{RCD}(max) limit, then access time is controlled by t_{CAC}.
6. Operation within the t_{RAD}(max) limit ensures that t_{RAC}(max) can be met. t_{RAD}(max) is specified as a reference point only. If t_{RAD} is greater than the specified t_{RAD}(max) limit, then access time is controlled by t_{AA}.
7. Last $\overline{CASx}$ to go low.
8. The last $\overline{CASx}$ edge to transition high.
9. Last falling $\overline{CASx}$ edge to first rising $\overline{CASx}$ edge.
10. Either t_{CDD} or t_{OED} must be satisfied.
11. Either t_{DZC} or t_{DZO} must be satisfied.
12. AC measurements assume t_T=2ns.

©IBM Corporation, 1996. All rights reserved.
Use is further subject to the provisions at the end of this document.

9006146 0003039 315

Read, Write, Read-Modify-Write and Ref. Cycles (Common Parameters)

Symbol	Parameter	-60		-70		Units	Notes
		Min.	Max.	Min.	Max.		
t_{DZO}	$\overline{OE}$ Delay Time From D_{IN}	0	—	0	—	ns	11
t_{DZC}	$\overline{CAS}$ Delay Time From D_{IN}	0	—	0	—	ns	11
t_T	Transition Time (Rise and Fall)	2	30	2	30	ns	12

1. Last rising $\overline{CASx}$ edge to first falling $\overline{CASx}$ edge.
2. If $\overline{CASx}$ is Low at the falling edge of $\overline{RAS}$, the corresponding I/Ox output will be maintained from the previous cycle. To initiate a new cycle and clear the I/O buffers, $\overline{CAS}$ must be pulsed High for t_{CP}
3. Each $\overline{CASx}$ must meet the minimum pulse width.
4. The first $\overline{CASx}$ edge to transition low.
5. Operation within the t_{RCD}(max) limit ensures that t_{RAC}(max) can be met. t_{RCD}(max) is specified as a reference point only. If t_{RCD} is greater than the specified t_{RCD}(max) limit, then access time is controlled by t_{CAC}.
6. Operation within the t_{RAD}(max) limit ensures that t_{RAC}(max) can be met. t_{RAD}(max) is specified as a reference point only. If t_{RAD} is greater than the specified t_{RAD}(max) limit, then access time is controlled by t_{AA}.
7. Last $\overline{CASx}$ to go low.
8. The last $\overline{CASx}$ edge to transition high.
9. Last falling $\overline{CASx}$ edge to first rising $\overline{CASx}$ edge.
10. Either t_{CDD} or t_{OED} must be satisfied.
11. Either t_{DZC} or t_{DZO} must be satisfied.
12. AC measurements assume t_T=2ns.

Write Cycle

Symbol	Parameter	-60		-70		Units	Notes
		Min.	Max.	Min.	Max.		
t_{WCS}	Write Command Set Up Time	0	—	0	—	ns	1,2,3
t_{WCH}	Write Command Hold Time	10	—	12	—	ns	3,4
t_{WP}	Write Command Pulse Width	10	—	12	—	ns	3
t_{RWL}	Write Command to $\overline{RAS}$ Lead Time	10	—	12	—	ns	
t_{CWL}	Write Command to $\overline{CAS}$ Lead Time	10	—	12	—	ns	5
t_{DS}	D_{IN} Setup Time	0	—	0	—	ns	6,7
t_{DH}	D_{IN} Hold Time	10	—	12	—	ns	6,7

1. t_{WCS}, t_{RWD}, t_{CWD} and t_{AWD} are not restrictive operating parameters. t_{RWD}, t_{CWD}, and t_{AWD} apply to Read-Modify-Write cycles. If $t_{WCS} \geq t_{WCS}$(min), the cycle is an Early Write cycle and the data I/O pins will remain open circuit (high impedance) throughout the entire cycle. If $t_{RWD} \geq t_{RWD}$(min), $t_{CWD} \geq t_{CWD}$(min), and $t_{AWD} \geq t_{AWD}$(min), the cycle is a Read-Modify-Write cycle and the data I/O pins will contain read data from the selected cells. If neither of the above sets of conditions are satisfied, the condition of the data I/O pins (at access time) is indeterminate.
2. The first $\overline{CASx}$ edge to transition low.
3. Parameter t_{WP} is applicable for a Delayed-Write cycle such as a Read-Write or Read-Modify-Write cycle. For Early-Write cycles, both t_{WCS} and t_{WCH} must be met.
4. Last $\overline{CASx}$ to go low.
5. The last $\overline{CASx}$ edge to transition high.
6. Output parameter (I/Ox) is referenced to corresponding $\overline{CAS}$ input; I/O0 by $\overline{CAS0}$, I/O1 by $\overline{CAS1}$, I/O2 by $\overline{CAS2}$, and I/O3 by $\overline{CAS3}$.
7. These parameters are referenced to the falling edge of $\overline{CAS}$ for Early-Write cycles and to the falling edge of $\overline{WE}$ for Delayed-Write or Read-Modify-Write cycles.

©IBM Corporation, 1996. All rights reserved.
Use is further subject to the provisions at the end of this document.

9006146 0003040 037

Read Cycle

Symbol	Parameter	-60		-70		Units	Notes
		Min.	Max.	Min.	Max.		
t_{RAC}	Access Time from $\overline{RAS}$	—	60	—	70	ns	1,2
t_{CAC}	Access Time from $\overline{CAS}$	—	15	—	18	ns	2,3,4,5
t_{AA}	Access Time from Address	—	30	—	35	ns	2,5,6
t_{OEA}	Access Time From $\overline{OE}$	—	15	—	18	ns	2,7
t_{RCS}	Read Command Setup Time	0	—	0	—	ns	8
t_{RCH}	Read Command Hold Time to $\overline{CAS}$	0	—	0	—	ns	9,10
t_{RRH}	Read Command Hold Time to $\overline{RAS}$	0	—	0	—	ns	9
t_{RAL}	Column Address to $\overline{RAS}$ Lead Time	30	—	35	—	ns	
t_{CLZ}	$\overline{CAS}$ to Output in Low-Z	0	—	0	—	ns	2,4
t_{OFF}	Output Buffer Turn-Off Delay	0	15	0	15	ns	4,11,12,13
t_{OEZ}	Output Buffer Turn-Off Delay From $\overline{OE}$	0	15	0	15	ns	12,13,14
t_{CDD}	$\overline{CAS}$ to D_{IN} Delay Time	15	—	20	—	ns	15
t_{OES}	$\overline{OE}$ Setup Time prior to $\overline{CAS}$	5	—	5	—	ns	
t_{ORD}	$\overline{OE}$ Setup Time prior to $\overline{RAS}$ (Hidden Refresh)	0	—	0	—	ns	

1. Assumes that $t_{RCD} \le t_{RCD}$(max) and $t_{RAD} \le t_{RAD}$(max). If t_{RCD} or t_{RAD} is greater than the maximum recommended value shown in this table, then t_{RAC} will exceed the value shown.
2. Measured with the specified current load and 100pF at V_{OL} = 0.8V and V_{OH} = 2.0V.
3. Assumes that $t_{RCD} \ge t_{RCD}$(max) and $t_{RAD} \le t_{RAD}$(max).
4. Output parameter (I/Ox) is referenced to corresponding $\overline{CAS}$ input; I/O0 by $\overline{CAS0}$, I/O1 by $\overline{CAS1}$, I/O2 by $\overline{CAS2}$, and I/O3 by $\overline{CAS3}$.
5. Access time is determined by the longer of t_{AA} or t_{CAC} or t_{CPA}.
6. Assumes that $t_{RCD} \le t_{RCD}$(max) and $t_{RAD} \ge t_{RAD}$(max).
7. If $\overline{OE}$ is tied permanently low, Late-Write or Read-Modify-Write operations are not possible.
8. The first $\overline{CASx}$ edge to transition low.
9. Either t_{RCH} or t_{RRH} must be satisfied for a Read cycle.
10. The last $\overline{CASx}$ edge to transition high.
11. t_{OFF} is referenced from the rising edge of $\overline{RAS}$ or $\overline{CAS}$, which ever is last.
12. t_{OFF}(max) and t_{OEZ}(max) define the time at which the output achieves the open circuit condition and are not referenced to output voltage levels.
13. The I/O pins go into high impedance during Read cycles once t_{OEZ} or t_{OFF} occurs. If $\overline{CASx}$ goes high first, $\overline{OE}$ becomes a "don't care". If $\overline{OE}$ goes HIGH and $\overline{CASx}$ stays low, $\overline{OE}$ is not a "don't care", and the I/Os will provide the previously read data if $\overline{OE}$ is taken back low (while $\overline{CASx}$ remains low).
14. All I/Os controlled, regardless of $\overline{CASx}$.
15. Either t_{CDD} or t_{OED} must be satisfied.

©IBM Corporation, 1996. All rights reserved.
Use is further subject to the provisions at the end of this document.

9006146 0003041 T73

Read-Modify-Write Cycle

Symbol	Parameter	-60		-70		Units	Notes
		Min.	Max.	Min.	Max.		
t_{RWC}	Read-Modify-Write Cycle Time	135	—	162	—	ns	
t_{RWD}	$\overline{RAS}$ to $\overline{WE}$ Delay Time	79	—	90	—	ns	1
t_{CWD}	$\overline{CAS}$ to $\overline{WE}$ Delay Time	34	—	40	—	ns	1,2
t_{AWD}	Column Address to $\overline{WE}$ Delay Time	49	—	55	—	ns	1
t_{OEH}	$\overline{OE}$ Command Hold Time	10	—	12	—	ns	3

1. t_{WCS}, t_{RWD}, t_{CWD} and t_{AWD} are not restrictive operating parameters. t_{RWD}, t_{CWD}, and t_{AWD} apply to Read-Modify-Write cycles. If $t_{WCS} \geq t_{WCS}$(min), the cycle is an Early Write cycle and the data I/O pins will remain open circuit (high impedance) throughout the entire cycle. If $t_{RWD} \geq t_{RWD}$(min), $t_{CWD} \geq t_{CWD}$(min), and $t_{AWD} \geq t_{AWD}$(min), the cycle is a Read-Modify-Write cycle and the data I/O pins will contain read data from the selected cells. If neither of the above sets of conditions are satisfied, the condition of the data I/O pins (at access time) is indeterminate.
2. The first $\overline{CASx}$ edge to transition low.
3. Late-Write and Read-Modify-Write cycles must have both t_{OEZ} and t_{OEH} satisfied ($\overline{OE}$ high during Write cycle) in order to insure that the output buffers will be in high impedance during the Write cycle. The data I/O pins will remain in high impedance until the next valid Read cycle.

Extended Data Out (Hyper Page) Mode Cycle

Symbol	Parameter	-60		-70		Units	Notes
		Min.	Max.	Min.	Max.		
t_{HCAS}	EDO (Hyper Page) Mode $\overline{CAS}$ Pulse Width	10	10k	12	10k	ns	
t_{HPC}	EDO (Hyper Page) Mode Cycle Time (Read/Write)	25	—	30	—	ns	1
t_{HPRWC}	EDO (Hyper Page) Mode Read Modify Write Cycle Time	60	—	72	—	ns	1
t_{DOH}	Data-out Hold Time from $\overline{CAS}$	5	—	5	—	ns	
t_{WHZ}	Output buffer Turn-Off Delay from $\overline{WE}$	0	10	0	15	ns	
t_{WPZ}	$\overline{WE}$ Pulse Width to Output Disable at $\overline{CAS}$ High	10	—	10	—	ns	
t_{CPRH}	$\overline{RAS}$ Hold Time from $\overline{CAS}$ Precharge	35	—	40	—	ns	
t_{CPA}	Access Time from $\overline{CAS}$ Precharge	—	35	—	40	ns	2,3
t_{RASP}	EDO (Hyper Page) Mode $\overline{RAS}$ Pulse Width	60	100K	70	100K	ns	4
t_{OEP}	$\overline{OE}$ High Pulse Width	10	—	10	—	ns	
t_{OEHC}	$\overline{OE}$ High Hold Time from $\overline{CAS}$ High	10	—	10	—	ns	

1. Last rising $\overline{CASx}$ edge to next cycle's last rising $\overline{CASx}$ edge.
2. Measured with the specified current load and 100pF at V_{OL} = 0.8V and V_{OH}.
3. Output parameter (I/Ox) is referenced to corresponding $\overline{CAS}$ input; I/O0 by $\overline{CAS0}$, I/O1 by $\overline{CAS1}$, I/O2 by $\overline{CAS2}$, and I/O3 by $\overline{CAS3}$.
4. t_{RASP} defines t_{RAS} in EDO (Hyper Page) mode cycles.

©IBM Corporation, 1996. All rights reserved.
Use is further subject to the provisions at the end of this document.

9006146 0003042 90T

Refresh Cycle

Symbol	Parameter		-60		-70		Units	Notes
			Min.	Max.	Min.	Max.		
t_{CSR}	$\overline{CAS}$ Setup Time ($\overline{CAS}$ before $\overline{RAS}$ Refresh)		5	—	5	—	ns	1,2
t_{CHR}	$\overline{CAS}$ Hold Time ($\overline{CAS}$ before $\overline{RAS}$ Refresh)		10	—	10	—	ns	1,3
t_{WRP}	$\overline{WE}$ Setup Time ($\overline{CAS}$ before $\overline{RAS}$ Refresh)		10	—	10	—	ns	
t_{WRH}	$\overline{WE}$ Hold Time ($\overline{CAS}$ before $\overline{RAS}$ Refresh)		10	—	10	—	ns	
t_{RPC}	$\overline{RAS}$ Precharge to $\overline{CAS}$ Hold Time		0	—	0	—	ns	
t_{REF}	Refresh period	SP version	—	16	—	16	ms	4
		LP version	—	128	—	128		

1. Enables on-chip refresh and address counters.
2. The first $\overline{CASx}$ edge to transition low.
3. The last CASx edge to transition high.
4. 1024 cycles.

Self Refresh Cycle - Low Power version only

Symbol	Parameter	-60		-70		Units	Notes
		Min.	Max.	Min.	Max.		
t_{RASS}	$\overline{RAS}$ Pulse Width (Self Refresh)	100	—	100	—	µs	1,2
t_{RPS}	$\overline{RAS}$ Precharge Time During Self Refresh Cycle	110	—	130	—	ns	1
t_{CHD}	$\overline{CAS}$ Hold Time During Self Refresh Cycle	10	—	10	—	ns	1

1. When using Self Refresh mode, the following refresh operations must be performed to ensure proper DRAM operation: If row addresses are being refreshed in a EVENLY DISTRIBUTED manner over the refresh interval using CBR refresh cycles, then only one CBR cycle must be performed immediately after exit from Self Refresh. If row addresses are being refreshed in a ROR manner over the refresh interval, then a full burst of all row refreshes must be performed immediately before entry to and immediately after exit from Self Refresh. If row addresses are being refreshed in a CBR-Burst manner over the refresh interval (i.e. burst of 8), then upon exiting from Self Refresh the user must conform to whatever refresh (i.e. burst of 8) method that was being used prior to entering Self Refresh.
2. I/O pins will go into high impedance after 100µs.

©IBM Corporation, 1996. All rights reserved.
Use is further subject to the provisions at the end of this document.

9006146 0003043 846

Read Cycle

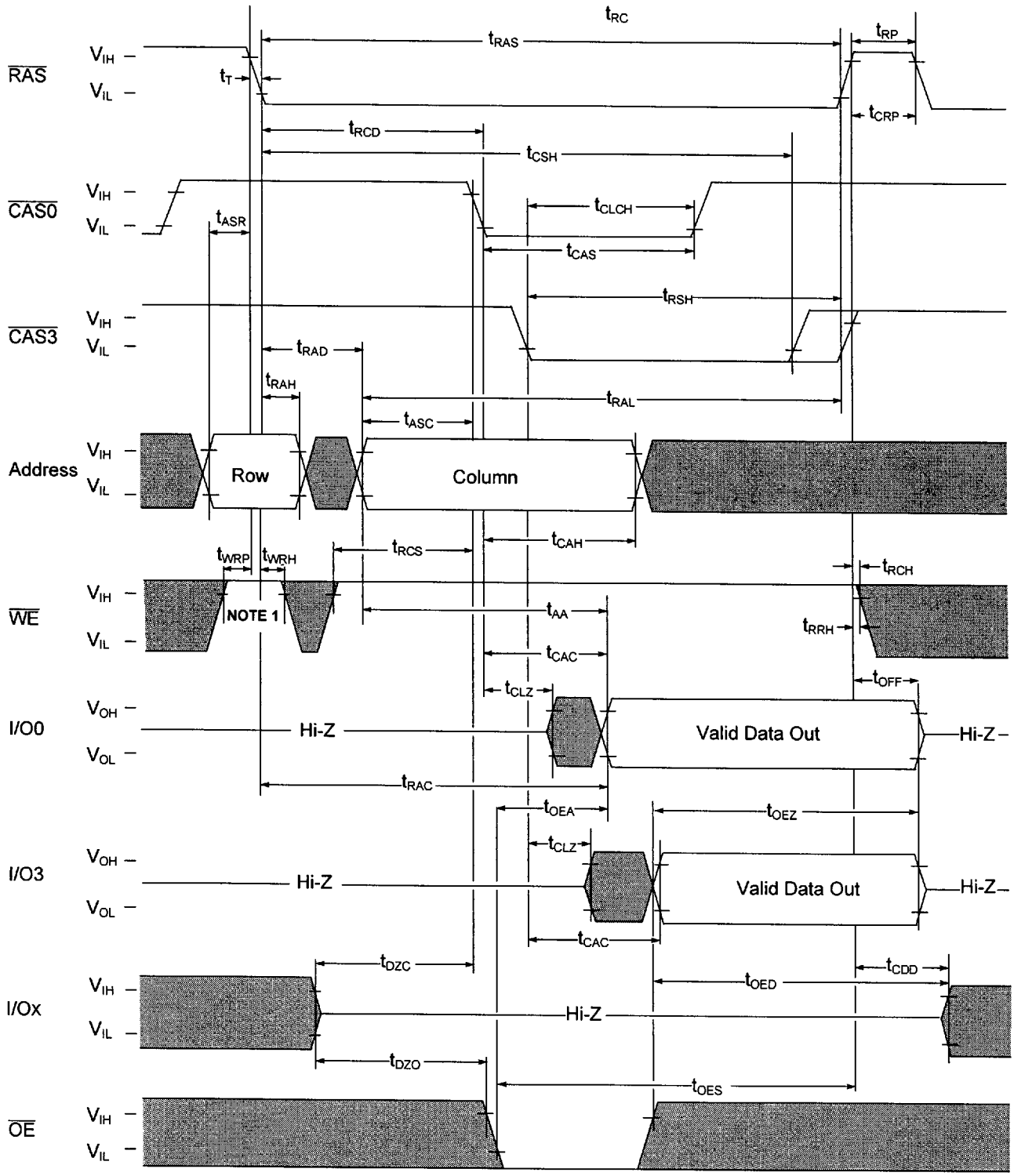

: "H" or "L"

NOTE 1: Implementing $\overline{WE}$ at $\overline{RAS}$ time During a Read or Write Cycle is optional. Doing so will facilitate compatibility with future EDO DRAMs.

©IBM Corporation, 1996. All rights reserved.
Use is further subject to the provisions at the end of this document.

9006146 0003044 782

Write Cycle (Early Write)

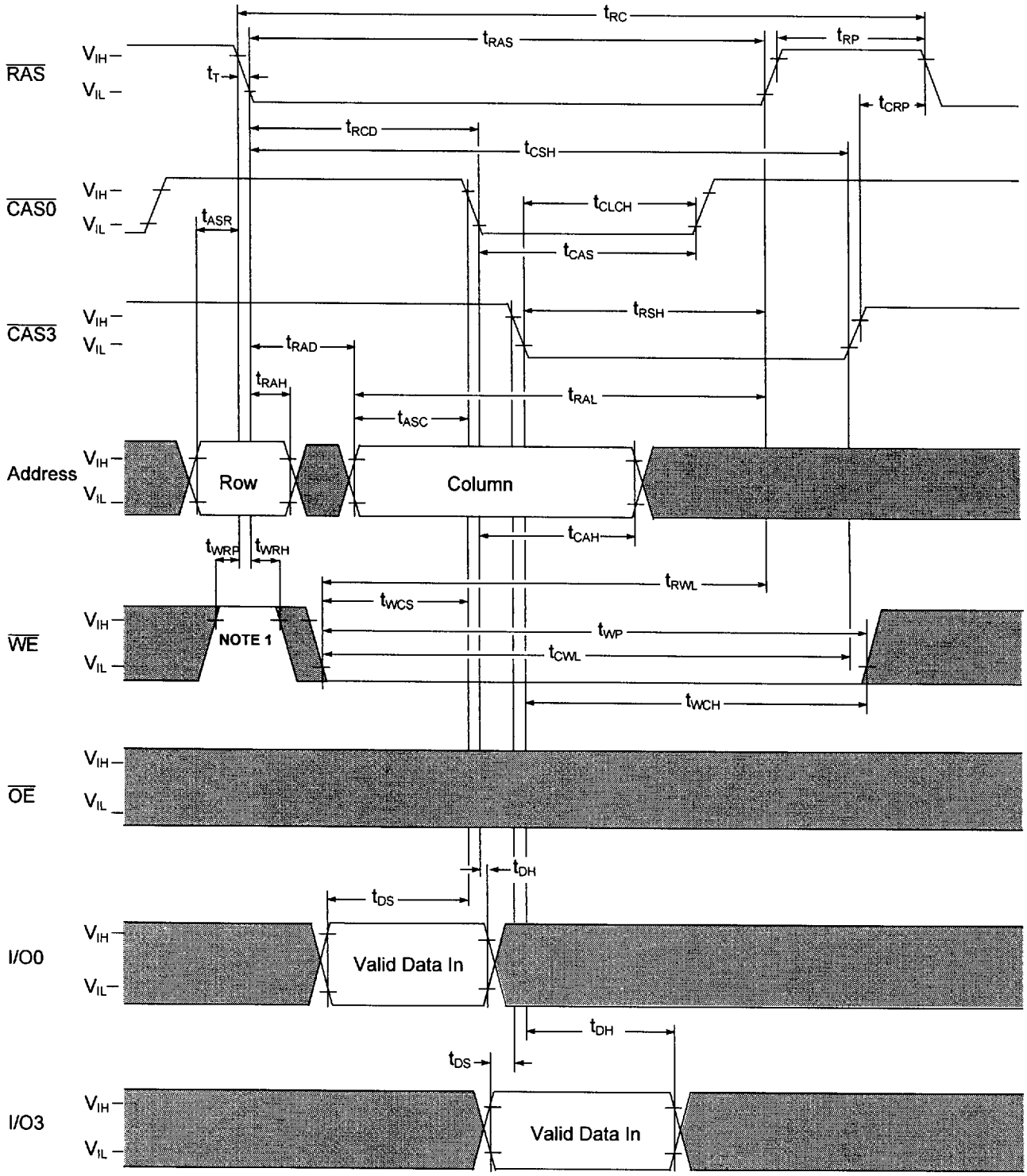

: "H" or "L"

NOTE 1: Implementing $\overline{WE}$ at $\overline{RAS}$ time During a Read or Write Cycle is optional. Doing so will facilitate compatibility with future EDO DRAMs.

©IBM Corporation, 1996. All rights reserved.
Use is further subject to the provisions at the end of this document.

9006146 0003045 619

Write Cycle (Delayed Write)

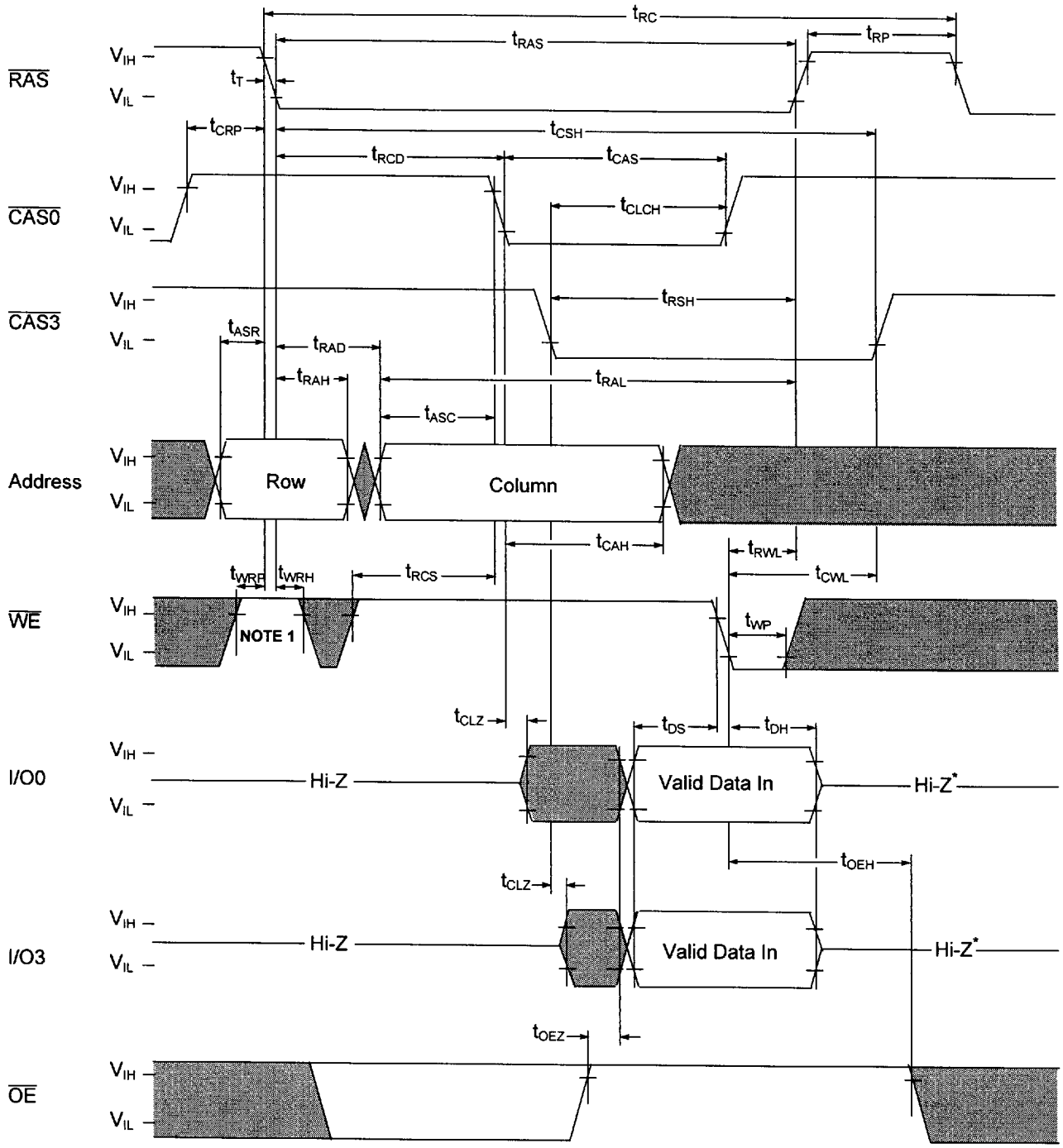

* t_{OEH} greater than or equal to t_{CWL}

: "H" or "L"

NOTE 1: Implementing $\overline{WE}$ at $\overline{RAS}$ time During a Read or Write Cycle is optional. Doing so will facilitate compatibility with future EDO DRAMs.

©IBM Corporation, 1996. All rights reserved.
Use is further subject to the provisions at the end of this document.

9006146 0003046 555

Read-Modify-Write Cycle

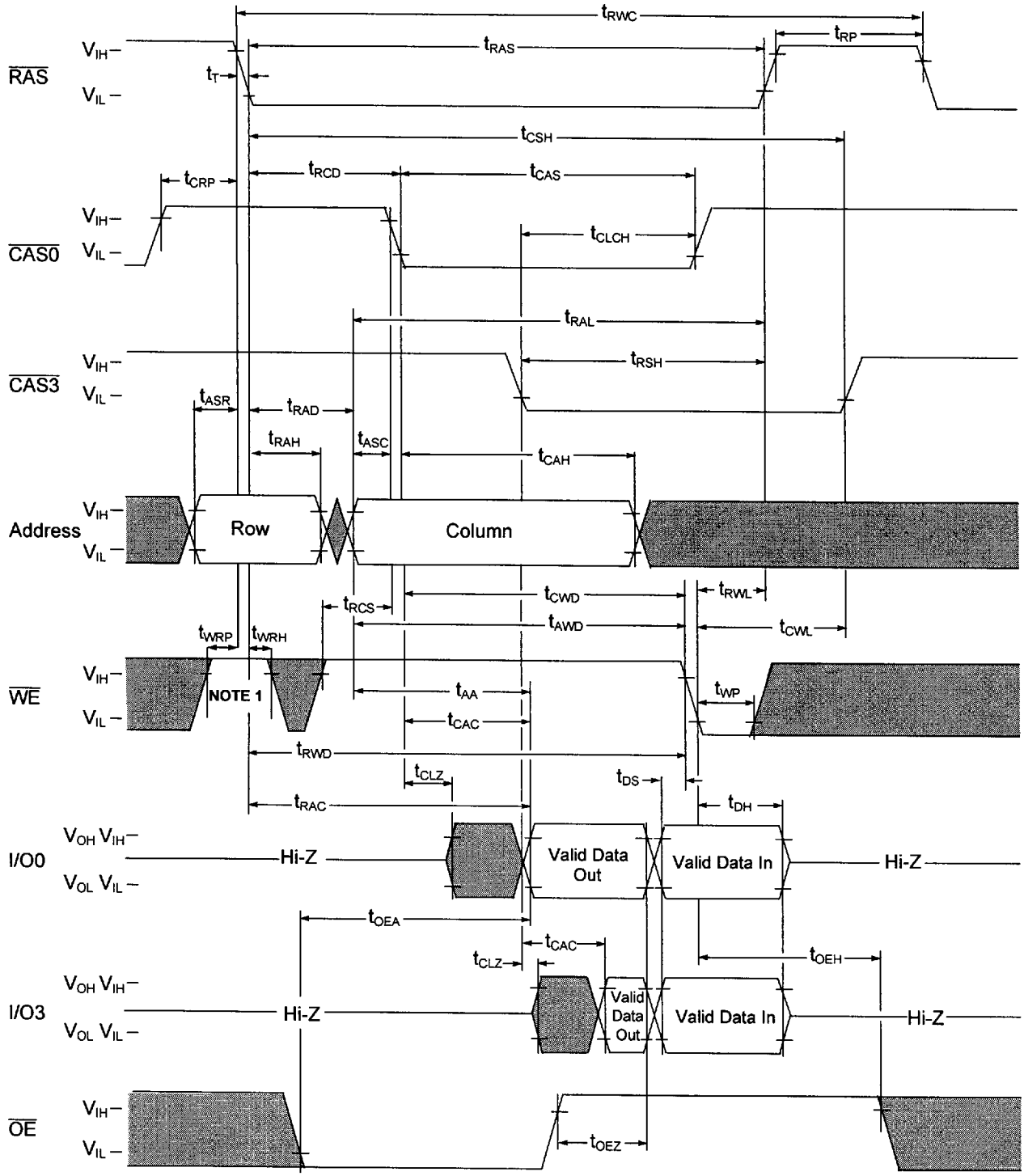

: "H" or "L"

NOTE 1: Implementing $\overline{WE}$ at $\overline{RAS}$ time During a Read or Write Cycle is optional. Doing so will facilitate compatibility with future EDO DRAMs.

©IBM Corporation, 1996. All rights reserved.
Use is further subject to the provisions at the end of this document.

9006146 0003047 491

EDO (Hyper Page) Mode Read Cycle

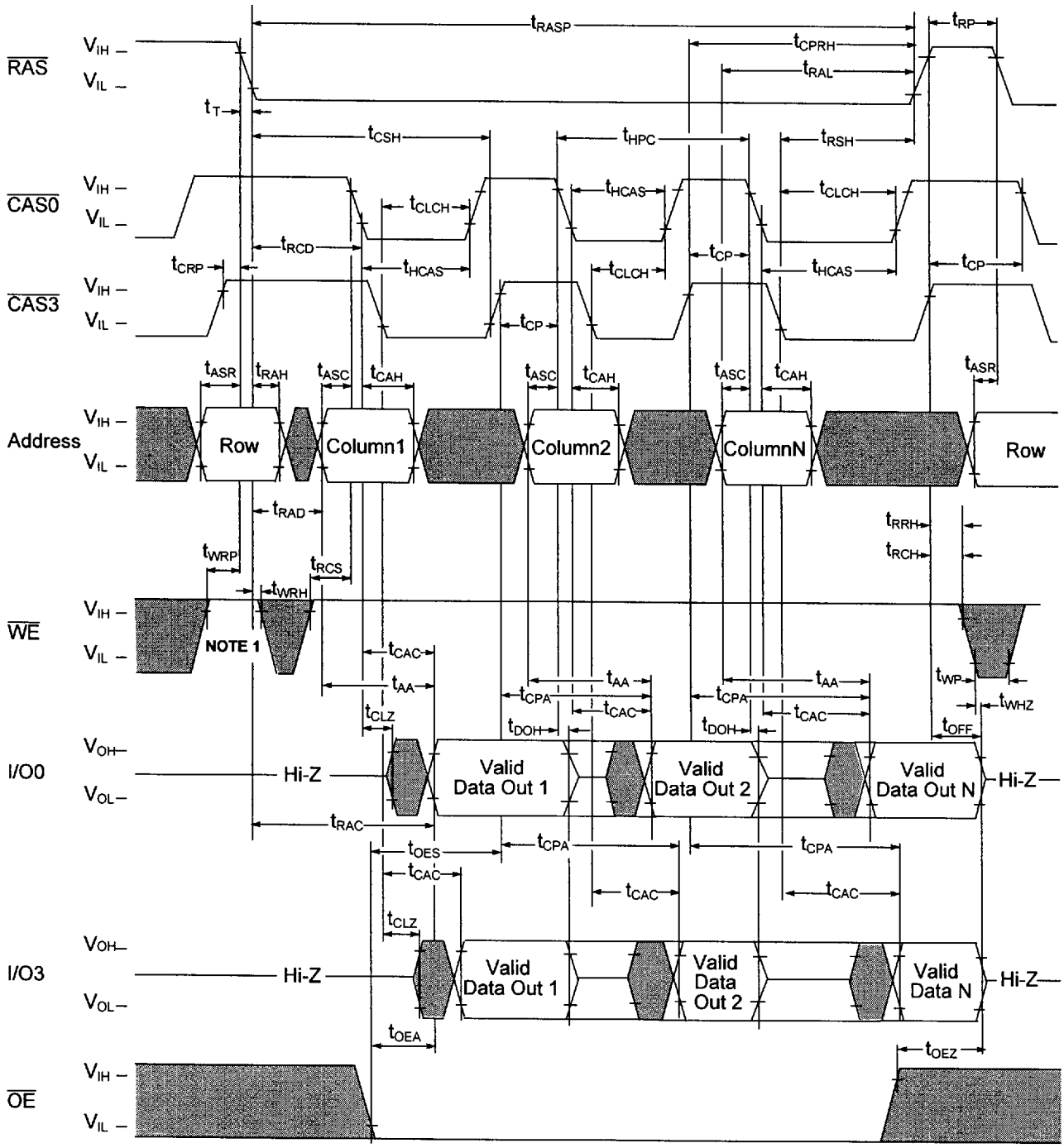

: "H" or "L"

NOTE 1: Implementing $\overline{WE}$ at $\overline{RAS}$ time During a Read or Write Cycle is optional. Doing so will facilitate compatibility with future EDO DRAMs.

©IBM Corporation, 1996. All rights reserved.
Use is further subject to the provisions at the end of this document.

9006146 0003048 328

EDO (Hyper Page) Mode Read Cycle ($\overline{OE}$ Control)

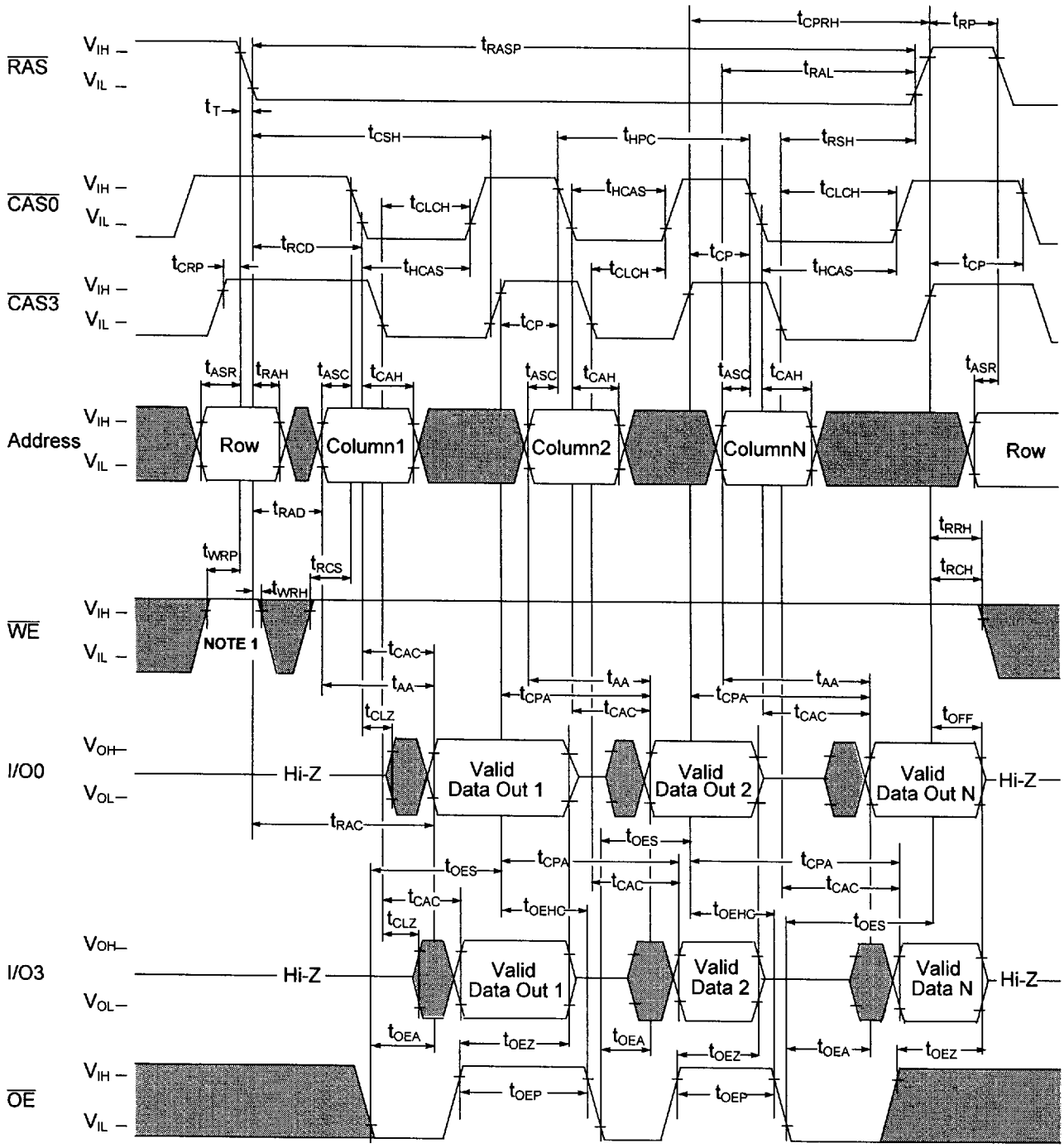

: "H" or "L"

NOTE 1: Implementing $\overline{WE}$ at $\overline{RAS}$ time During a Read or Write Cycle is optional. Doing so will facilitate compatibility with future EDO DRAMs.

©IBM Corporation, 1996. All rights reserved.
Use is further subject to the provisions at the end of this document.

9006146 0003049 264

EDO (Hyper Page) Mode Read Cycle (WE Control)

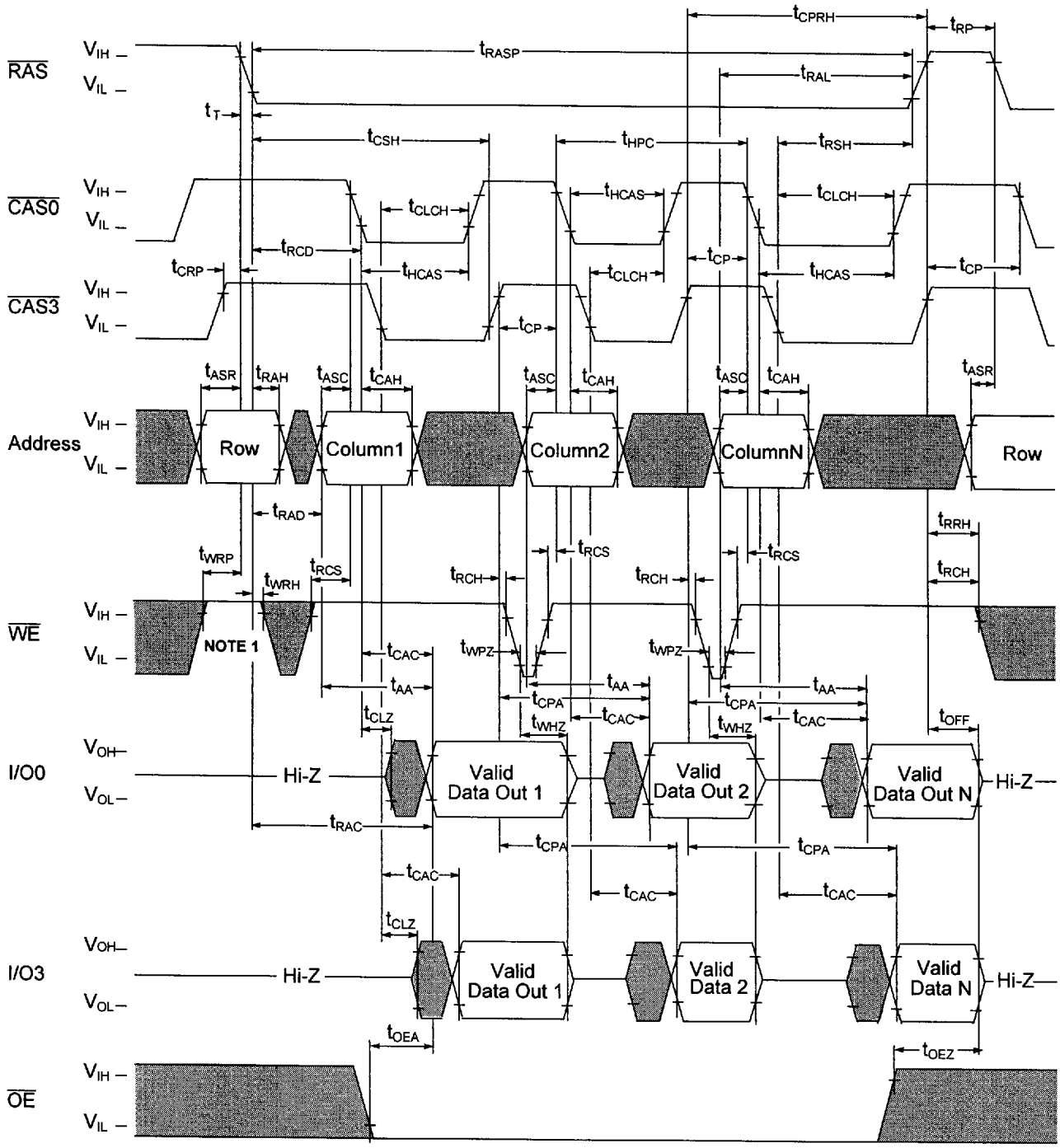

: "H" or "L"

NOTE 1: Implementing WE at RAS time During a Read or Write Cycle is optional. Doing so will facilitate compatibility with future EDO DRAMs.

©IBM Corporation, 1996. All rights reserved.
Use is further subject to the provisions at the end of this document.

9006146 0003050 T86

EDO (Hyper Page) Mode Early Write Cycle

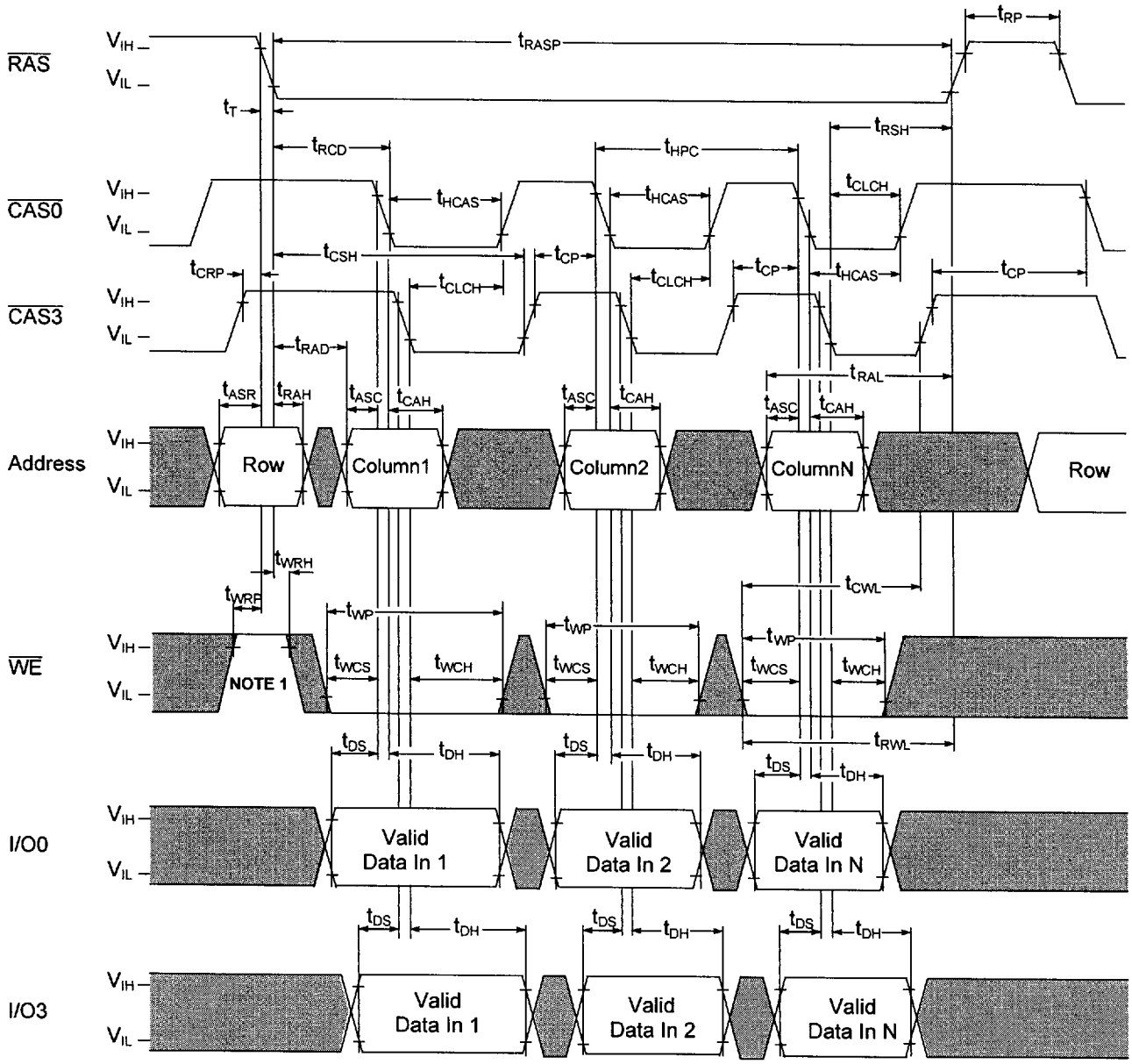

$\overline{OE}$ = DON'T CARE

: "H" or "L"

NOTE 1: Implementing $\overline{WE}$ at $\overline{RAS}$ time During a Read or Write Cycle is optional. Doing so will facilitate compatibility with future EDO DRAMs.

©IBM Corporation, 1996. All rights reserved.
Use is further subject to the provisions at the end of this document.

9006146 0003051 912

EDO (Hyper Page) Mode Late Write Cycle

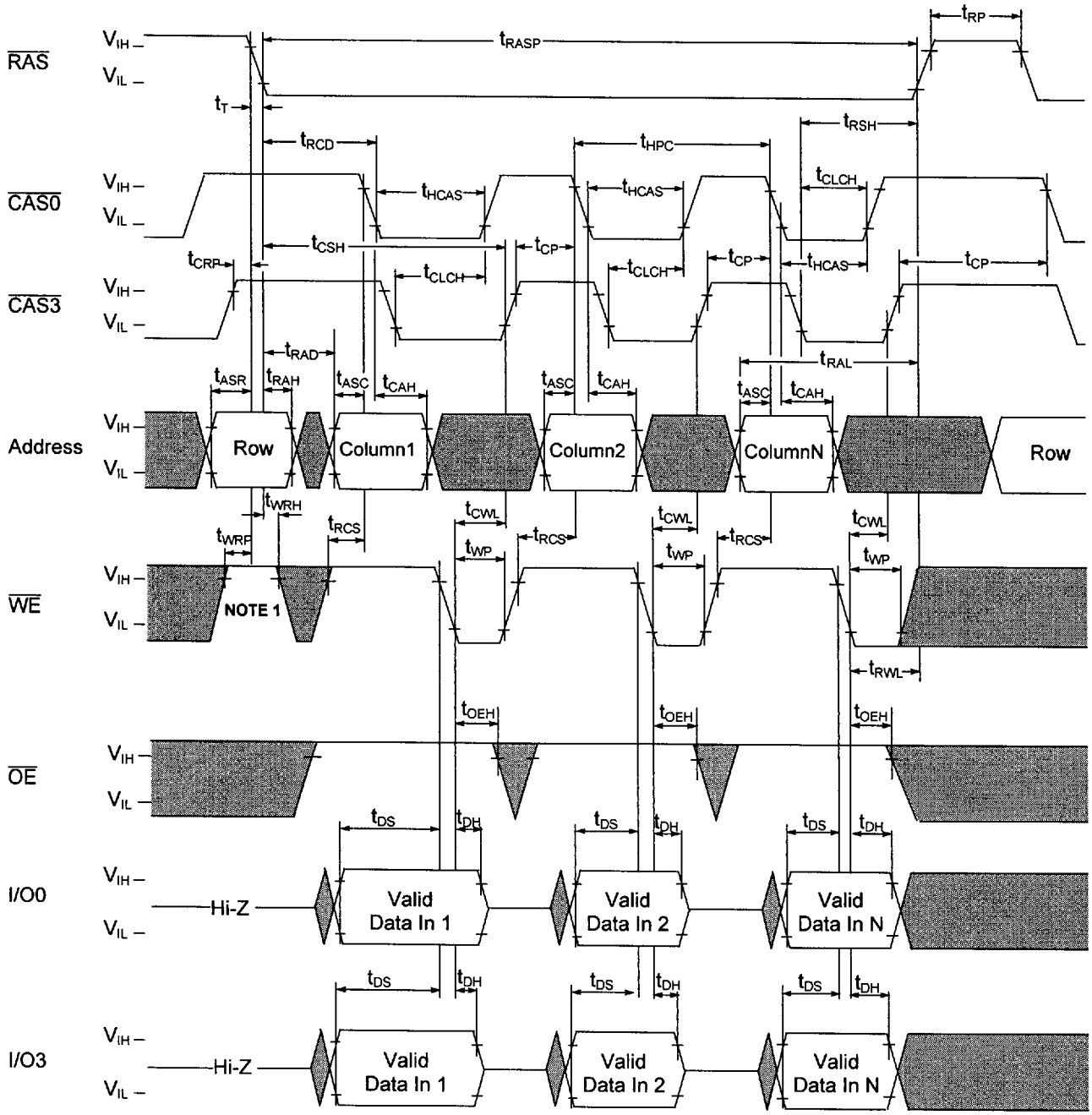

: "H" or "L"

NOTE 1: Implementing $\overline{WE}$ at $\overline{RAS}$ time During a Read or Write Cycle is optional. Doing so will facilitate compatibility with future EDO DRAMs.

©IBM Corporation, 1996. All rights reserved.
Use is further subject to the provisions at the end of this document.

9006146 0003052 859

EDO (Hyper Page) Mode Read Modify Write Cycle

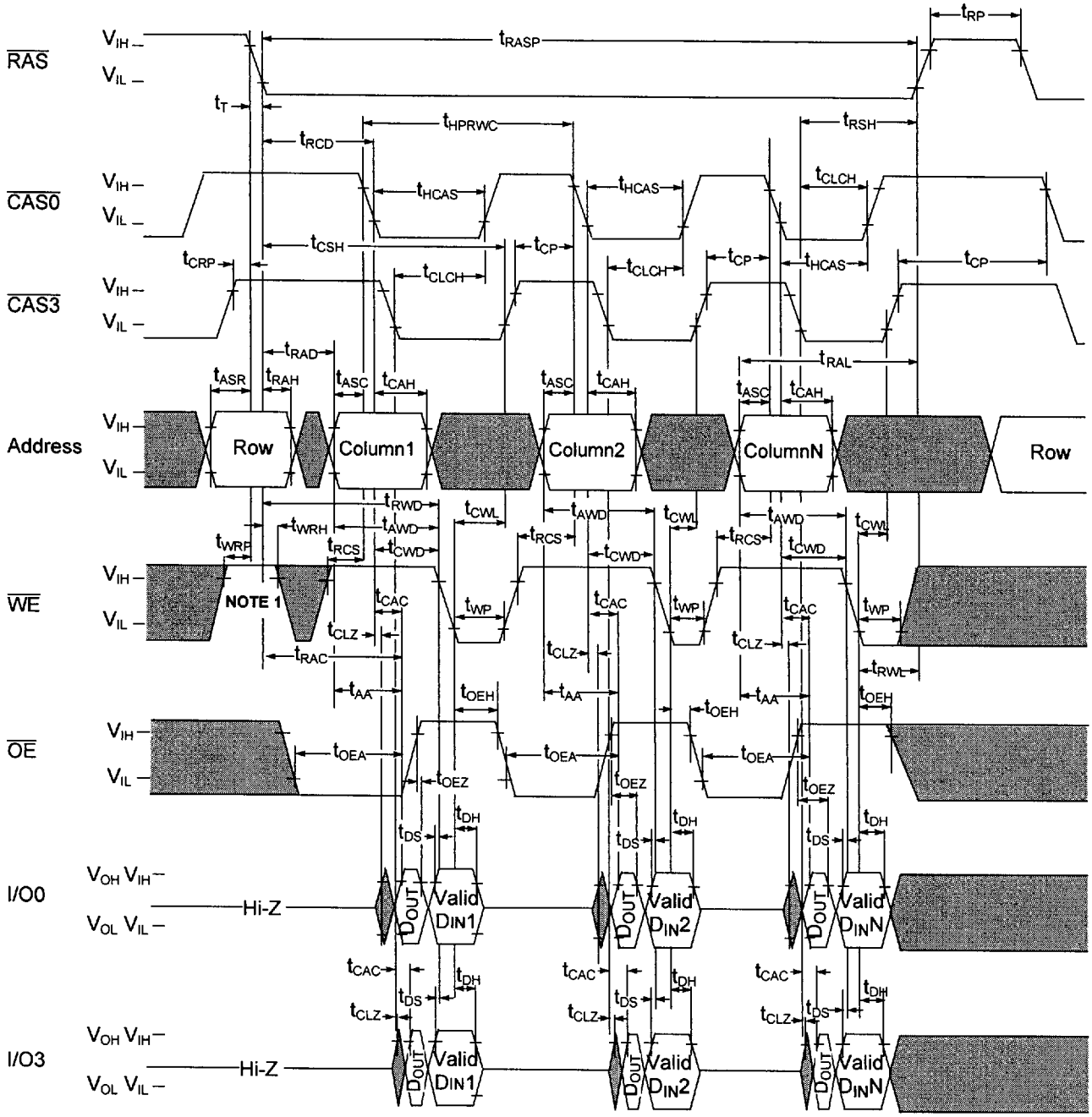

: "H" or "L"

NOTE 1: Implementing $\overline{WE}$ at $\overline{RAS}$ time During a Read or Write Cycle is optional. Doing so will facilitate compatibility with future EDO DRAMs.

©IBM Corporation, 1996. All rights reserved.
Use is further subject to the provisions at the end of this document.

9006146 0003053 795

EDO (Hyper Page) Mode Read and Write Cycle

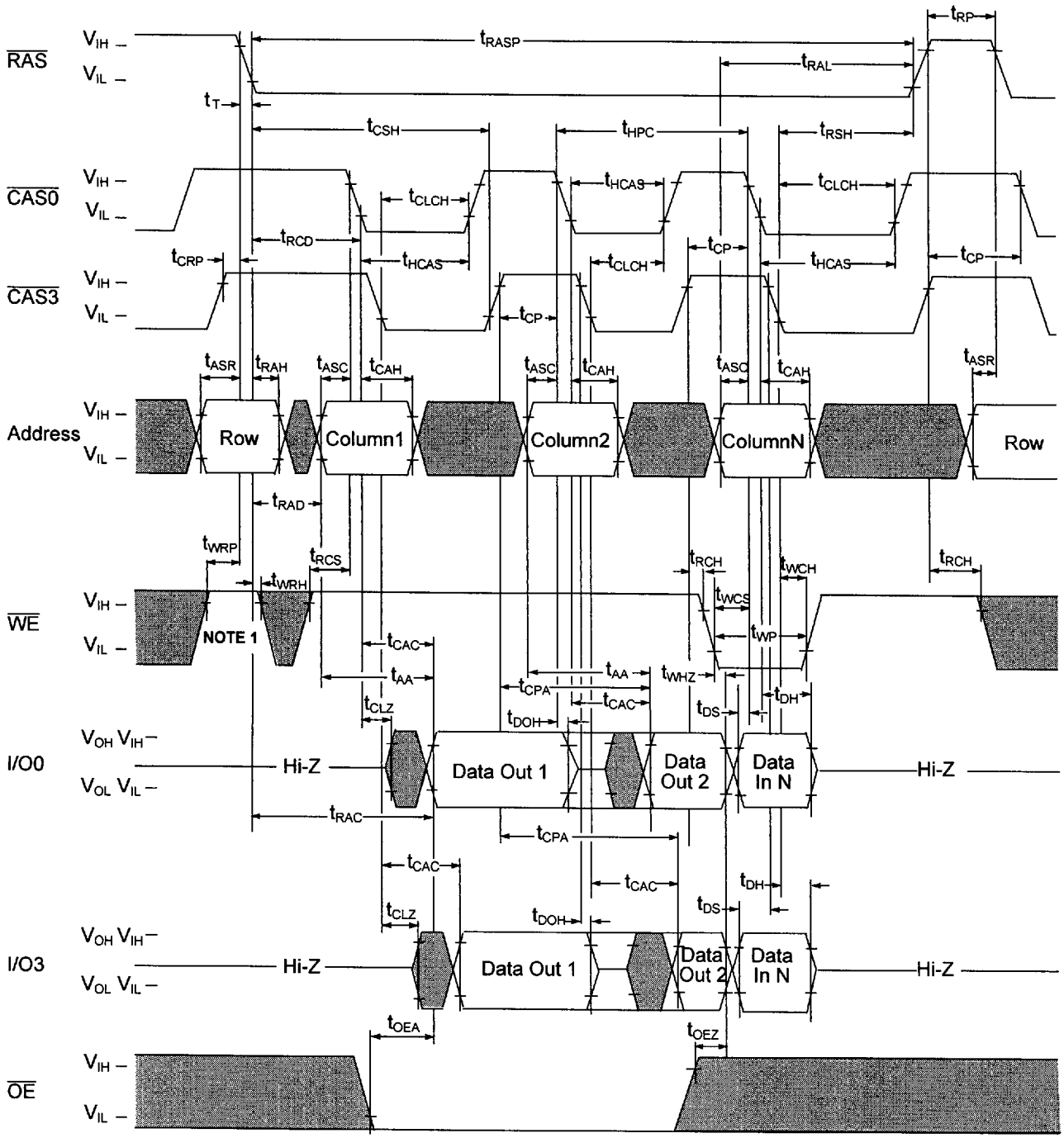

: "H" or "L"

NOTE 1: Implementing $\overline{WE}$ at $\overline{RAS}$ time During a Read or Write Cycle is optional. Doing so will facilitate compatibility with future EDO DRAMs.

©IBM Corporation, 1996. All rights reserved.
Use is further subject to the provisions at the end of this document.

9006146 0003054 621

$\overline{RAS}$ Only Refresh Cycle

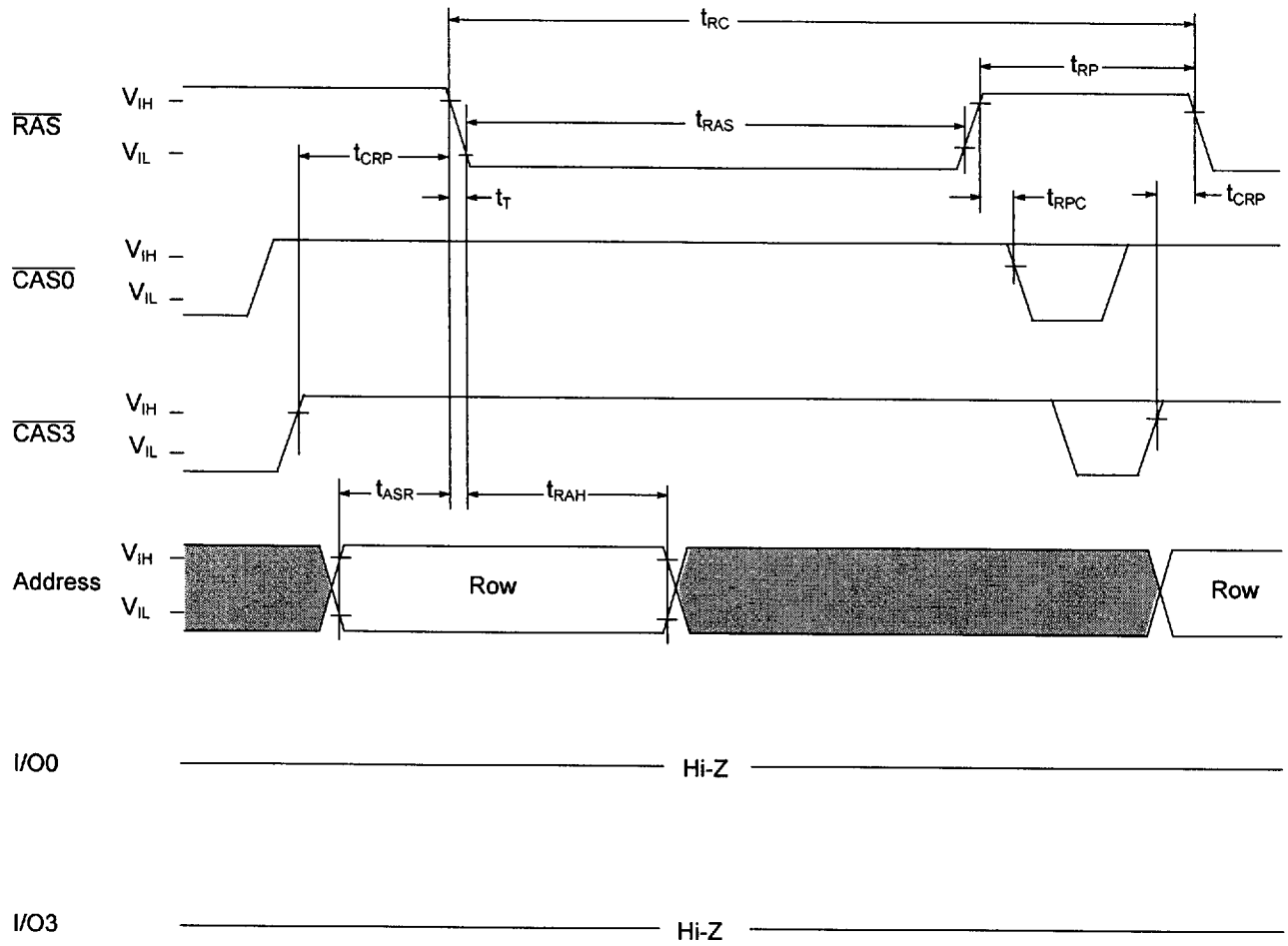

NOTE: $\overline{WE}$, $\overline{OE}$ are "H" or "L"

: "H" or "L"

REFRESH ADDRESS FIELD = A0-A9

©IBM Corporation, 1996. All rights reserved.
Use is further subject to the provisions at the end of this document.

9006146 0003055 568

$\overline{CAS}$ Before $\overline{RAS}$ Refresh Cycle

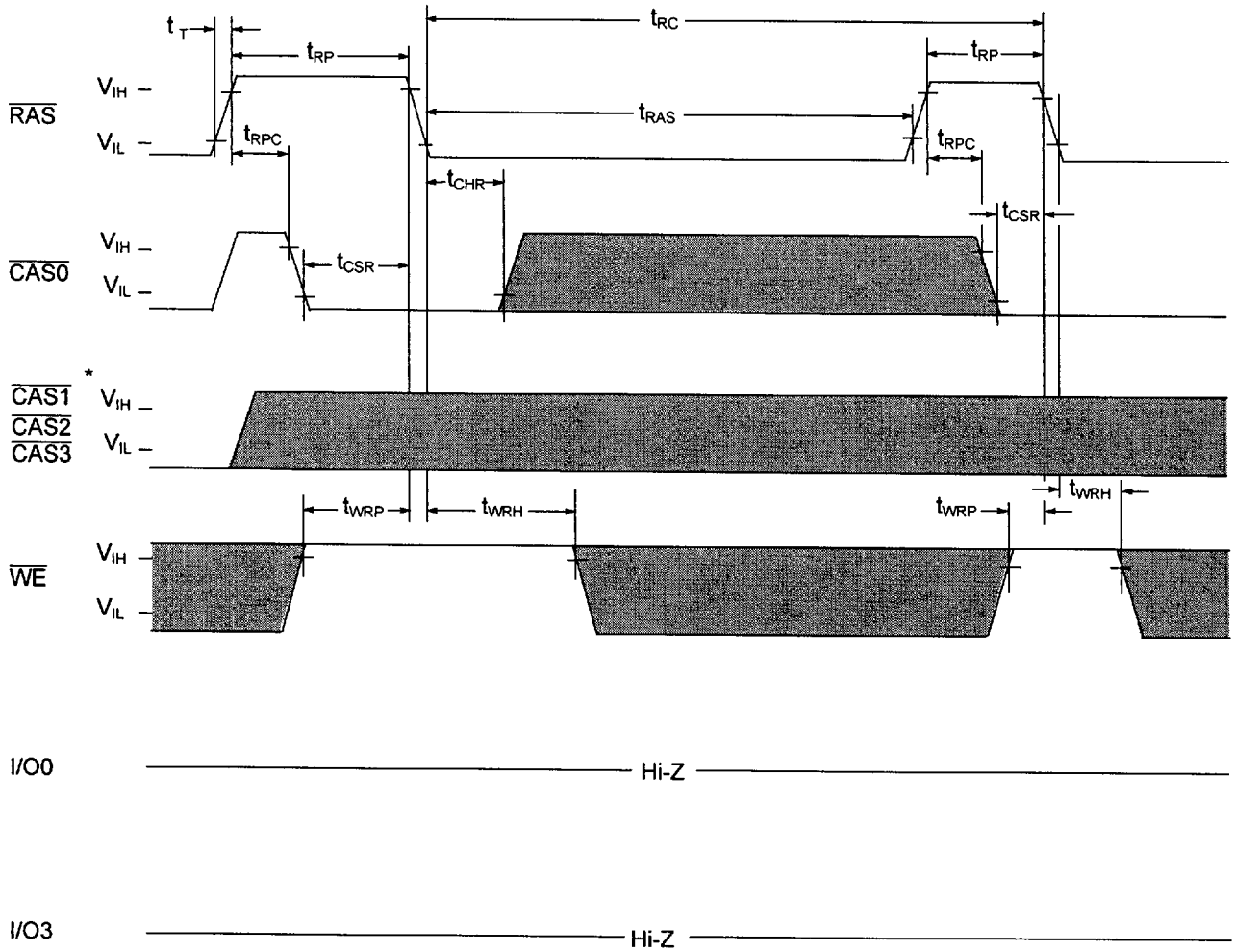

A0-A9 = DON'T CARE

$\overline{OE}$ = DON'T CARE

: "H" or "L"

*Any one $\overline{CAS}$ ($\overline{CAS0}$,$\overline{CAS1}$,$\overline{CAS2}$, or $\overline{CAS3}$) can initiate a CBR cycle.

©IBM Corporation, 1996. All rights reserved.
Use is further subject to the provisions at the end of this document.

9006146 0003056 4T4

Hidden Refresh Cycle (Read)

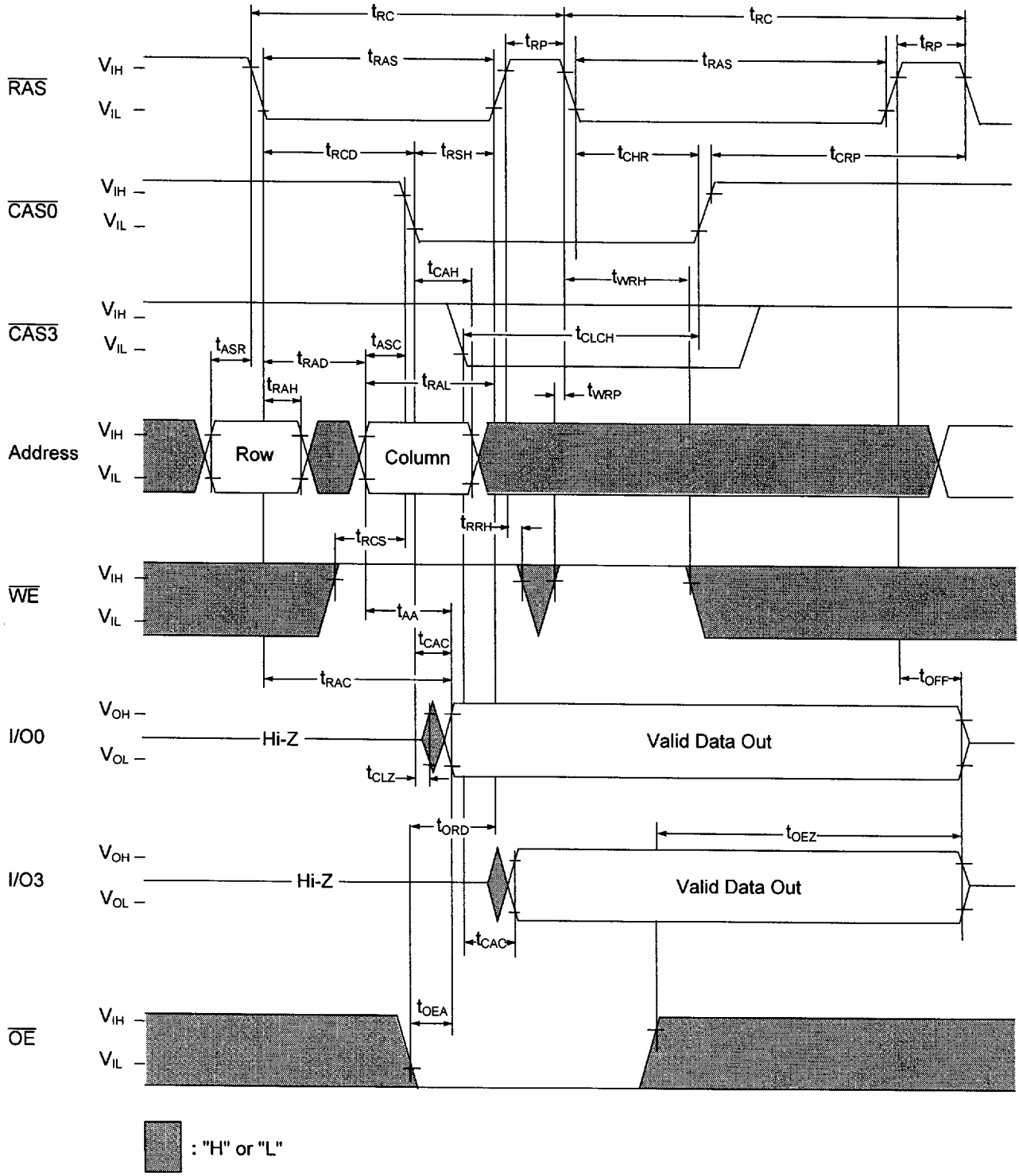

©IBM Corporation, 1996. All rights reserved.
Use is further subject to the provisions at the end of this document.

9006146 0003057 330

Hidden Refresh Cycle (Write)

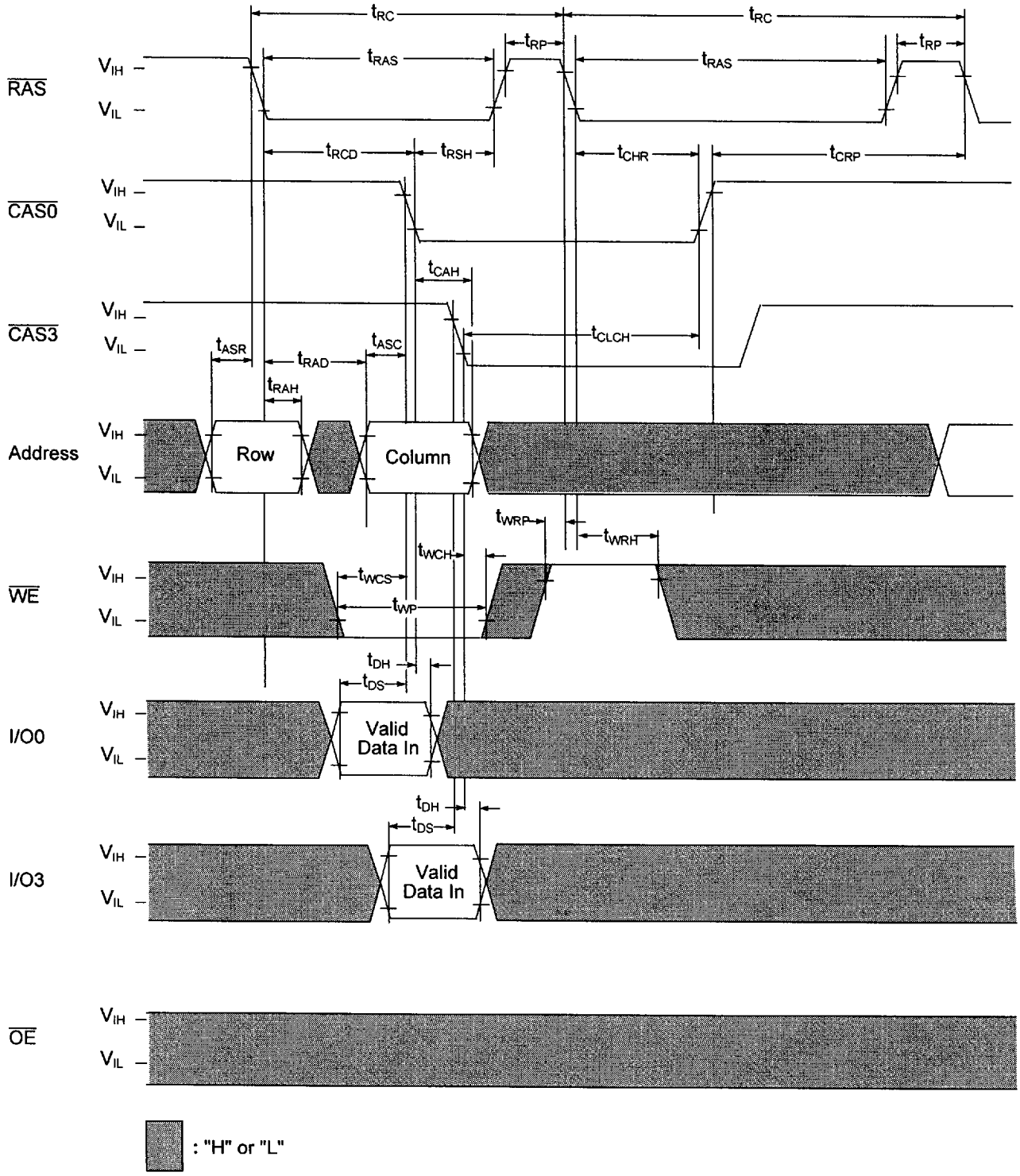

©IBM Corporation, 1996. All rights reserved.
Use is further subject to the provisions at the end of this document.

9006146 0003058 277

Self Refresh Cycle (Sleep Mode) - Low Power version only

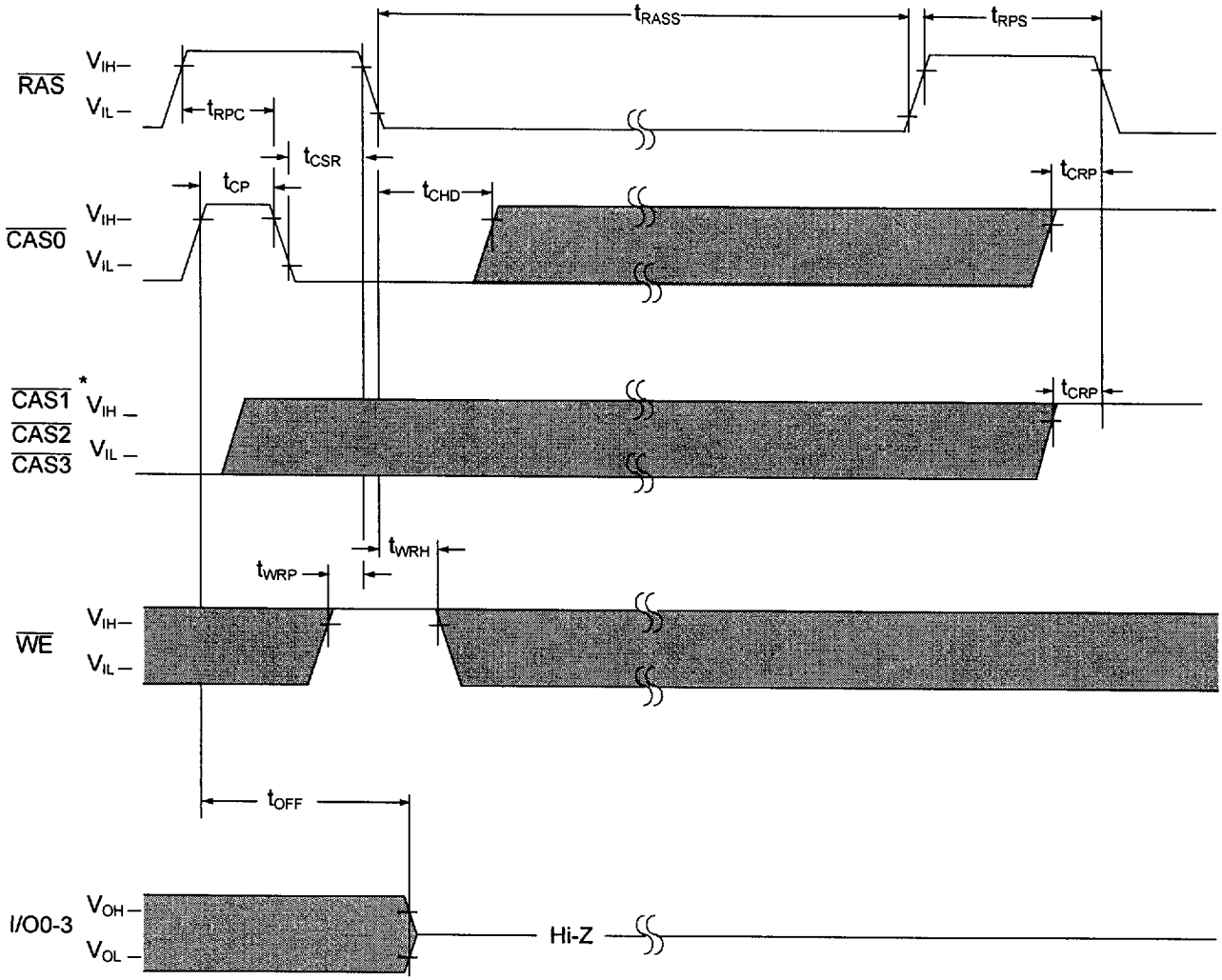

: "H" or "L"

*Any one $\overline{CAS}$ ($\overline{CAS0}$, $\overline{CAS1}$, $\overline{CAS2}$, or $\overline{CAS3}$) can initiate a Self Refresh cycle.

NOTE: Address and OE are "H" or "L"
Once $\overline{RAS}$ (min) is provided and $\overline{RAS}$ remains low, the DRAM will be in Self Refresh, commonly known as "Sleep Mode."

©IBM Corporation, 1996. All rights reserved.
Use is further subject to the provisions at the end of this document.

9006146 0003059 103

Package Dimensions (300 mil; 26/24 lead; Small Outline J-Lead)

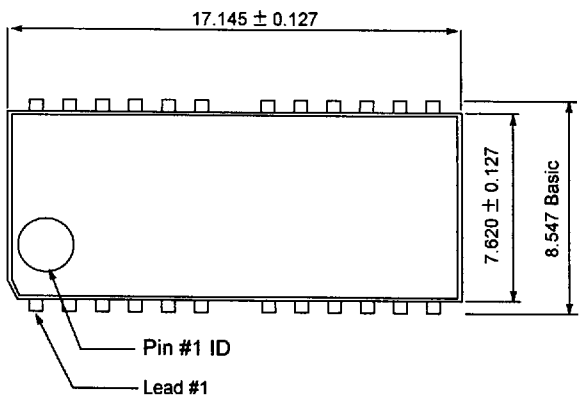

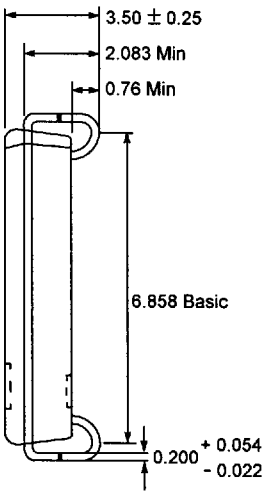

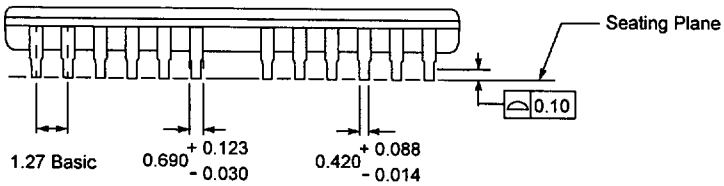

NOTE: All dimensions are in millimeters; Packages diagrams are not drawn to scale.

©IBM Corporation, 1996. All rights reserved.
Use is further subject to the provisions at the end of this document.

9006146 0003060 925

Package Dimensions (300 mil; 26/24 lead; Thin Small Outline Package)

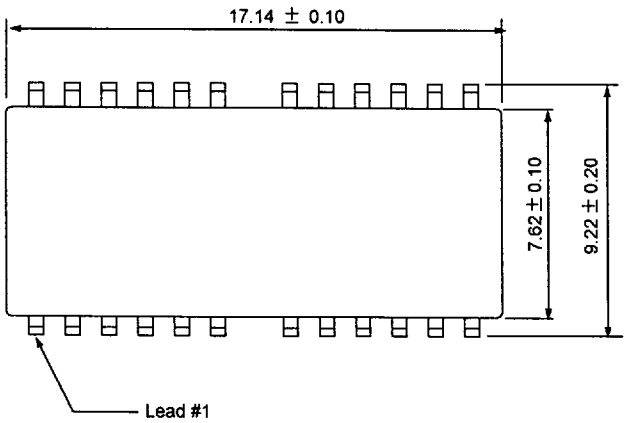

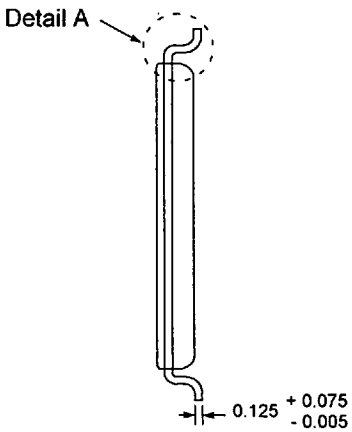

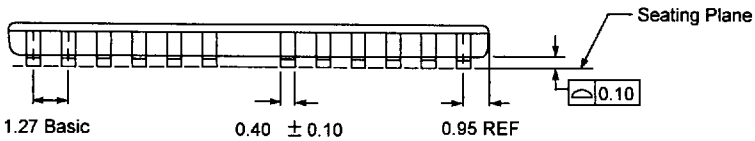

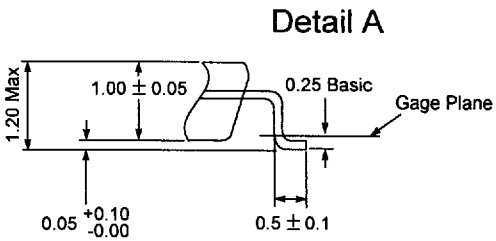

NOTE: All dimensions are in millimeters; Package diagrams are not drawn to scale.

©IBM Corporation, 1996. All rights reserved.
Use is further subject to the provisions at the end of this document.

9006146 0003061 861

Revision Log

Revision	Contents of Modification
2/27/96	Initial Release

©IBM Corporation, 1996. All rights reserved.
Use is further subject to the provisions at the end of this document.

9006146 0003062 7T8