PEB 3065 (SLICOFI®) General Description

The Signal Processing Subscriber Line Interface Codec Filter SLICOFI is a logic continuation of the well established family of the Siemens DSP Codec-Filter ICs with the vertical integration of all DC-feeding, supervision and PL meterpulse injection features on-chip as well. Fabricated in a standard 1 µm BiCMOS technology the SLICOFI is tailored for very flexible solutions in digital communication systems. For the first time the SLICOFI uses the benefits of a DSP not only for the voice channel but even for line feeding and supervision which leads to a very high flexibility without the need for external components.

Based on an advanced digital filter concept, the PEB 3065 provides excellent transmission performance. The new filter concept leads to a maximum of independence between the different filter blocks. Each filter block can be seen as a one to one representative of the corresponding network element. Together with the software package SLICOS, filter optimizing to different applications can be done in a clear and straight forward procedure. The AC frequency behaviour is mainly determined by the digital filters. Using the new oversampling 1-bit $\Sigma\Delta$-AD/DA converter, linearity is only limited by second order parasitic effects.

The new – digital – solution of line feeding offers free programmability of feeding current and voltage as well as very fast settling of the DC operating point after transitions. A 0.4-Hz lowpass filter in the DC loop is mainly responsible for the system stability.

Additionally telefax generation and filtering is implemented as well as free programmable (balanced) ring generation with zero crossing injection. Offhook detection with programmable thresholds is possible in all operating modes. To reduce overall power consumption of the line card, the SLICOFI provides a special mode called Power Denial where offhook is done via two high voltage inputs (VLINE) directly connected to the line since the HV-SLIC is switched off.

Type	Package
PEB 3065-N	P-LCC-44-1 (SMD)
PEF 3065-N	P-LCC-44-1 (SMD)

PEB 3065 (SLICOFI®) Features

- Single chip CODEC and FILTER including all LOW VOLTAGE SLIC functions
- Only few external components required
- No trimming or adjustments required
- Specification according to relevant CCITT, LSSGR and DBP recommendations
- Digital signal processing technique
- Advanced low power 1 µm BiCMOS technology
- PCM encoded digital voice transmission (A-Law or µ-Law)
- Four pin serial IOM-2 interface
- High performance A/D and D/A conversion
- Programmable digital filters for
  - impedance matching
  - transhybrid balancing
  - frequency response
  - gain
- Advanced test capabilities
  - integrated line and circuit tests
  - 6 digital loops
  - 5 analog loops
  - two programmable tone generators
- Optimized HV-SLIC interface
- Fully digital programmable DC characteristic
  - programmable constant current from 0 – 70 mA
  - programmable resistive values from 0 – 2 × 500 Ω
- Programmable integrated Teletax injection and filtering during conversation and onhook
  - programmable up to 125 mVrms (5 Vrms at a/b wire) programmable frequency 12/16 kHz
- Polarity reversal (programmable soft or hard)
- Integrated (balanced) ringing generation with zero crossing injection
  - programmable frequency between 16.6 and 70 Hz
  - Programmable amplitude up to 2.125 Vrms (85 Vrms at a/b wire)
- Four operating modes: power-denial, power-down, active and ringing
- Offhook detection with programmable thresholds for all operating modes
- Integrated ring trip detection with zero crossing turn off function
- Ground start and loop start possible
- Integrated checksum calculation for CRAM
- Line card identification
- Also available with extended temperature range – 40 °C to 85 °C (PEF 3065-N)

PEB 4065 (HV-SLIC) General Description

The High Voltage Subscriber Line IC PEB 4065 is a rugged and reliable interface between the telephone line and the SLICOFI, a low voltage Subscriber Line Interface and Codec Filter IC. The PEB 4065 is fabricated in a Smart Power Technology offering a breakthrough voltage of at least 170 V.

The PEB 4065 provides battery feeding between – 24 V and – 80 V and internal ringing injection with a differential ring voltage up to 85 Vrms. In order to achieve these high amplitudes an auxiliary positive battery voltage is used during ringing. This voltage can also be applied in order to drive very long telephone lines.

The HV-SLIC is designed for a voltage feeding current sensing line interface concept and provides sensing of transversal and longitudinal current on both wires.

There is a power-down mode reducing power consumption while providing all supervision functions and a power-denial mode where the device is switched off turning the line outputs to a high impedance state.

Type	Package
PEB 4065-T	P-DSO-20-5 (SMD)
PEF 4065-T	P-DSO-20-5 (SMD)

PEB 4065 (HV-SLIC) Features
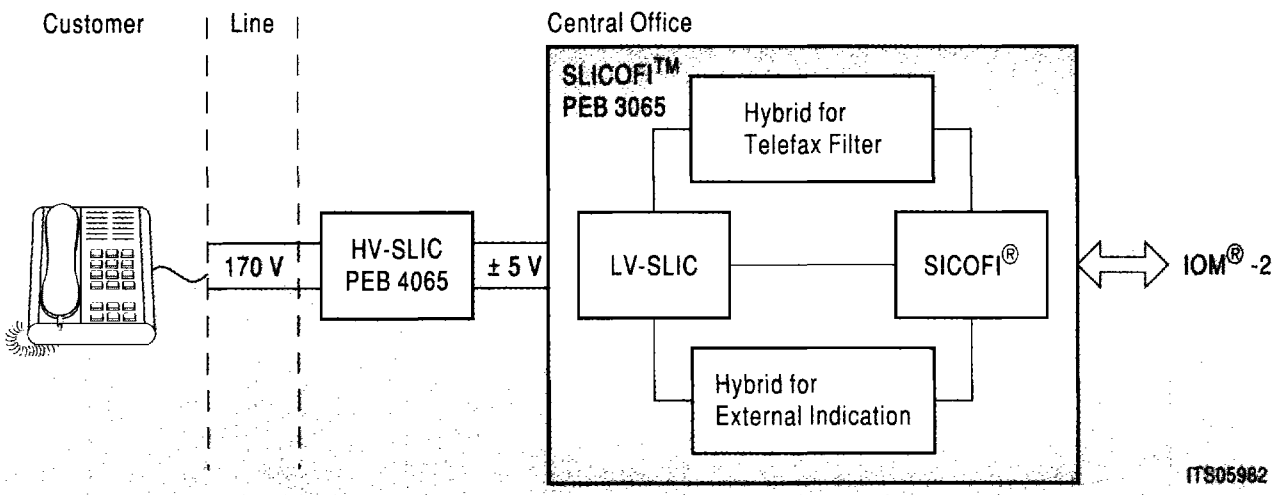
- High voltage line feeding
- Internal ring and metering signal injection
- Sensing of transversal and longitudinal line current
- Reliable 170 V Smart Power Technology
- Battery voltage – 24 V...– 80 V
- Boosted battery mode for long telephone lines and up to 85 Vrms balanced ringing
- Polarity reversal
- Small P-DSO-20-5 power package
- Also available with extended temperature range – 40 °C to 85 °C (PEF 4065-T)