General Description

The PMB 2201, 2202 family is a direct quadrature modulator and double balanced mixer. It is fabricated using Siemens B6HF silicon bipolar process. In a typical application the wanted mixer output product is bandpass filtered and then fed to the modulator LO input. The mixer may also be used to upconvert the modulator output signal to higher frequencies up to 2.5 GHz.

The modulator generates two orthogonal carriers which are mixed with the baseband modulation signals by two multipliers. The outputs of the multipliers are added and amplified by a linear output stage. The modulator and the mixer have separate power supplies and grounds. They can be powered down independently.

Applications

- Vector modulated cellular and cordless systems:
  PMB 2201: GSM, PDC, DAMPS, CDMA, WLAN,
  PMB 2202: PCN, PCS, PDC, PHS, WCPE, WLL, WLAN, etc.
- Various modulation schemes, such as PM, PSK, FSK, QAM, QPSK, GMSK etc.
- Analog systems with FM- and AM modulation
- Space and power saving optimizations of existing discrete transmitter circuits

Type	Package
PMB 2201-R	P-TSSOP-24-1 (SMD)
PMB 2202-R	P-TSSOP-24-1 (SMD)

Features

- Direct modulation vector modulator
- Wide LO-frequency range
  PMB 2201: 0.8 GHz to 1.5 GHz
  PMB 2201: 1.5 GHz to 2.5 GHz
- Generation of orthogonal carriers without external elements and without trimming
- 35-dB carrier rejection, 40-dB SSB rejection
- 42-dB rejection of third order products
- 0-dBm modulator output power
- Independent double balanced Gilbert cell mixer
- RF- and IF-frequency range from DC to 2.5 GHz
- Low noise figure, high conversion gain
- Supply voltage range from 2.7 V to 5.5 V
- Low power consumption
- Power-down mode
- P-TSSOP-24 package
- Temperature range – 30 °C to 85 °C

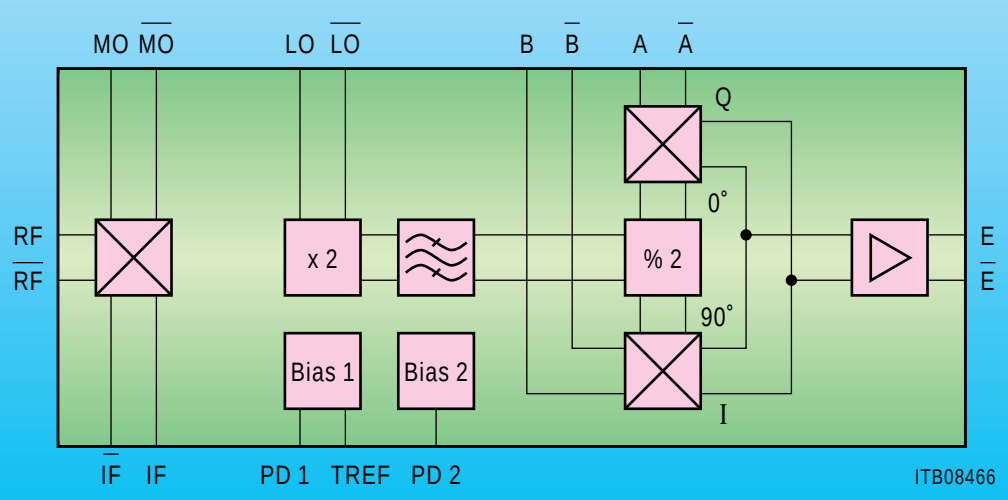

Block Diagram

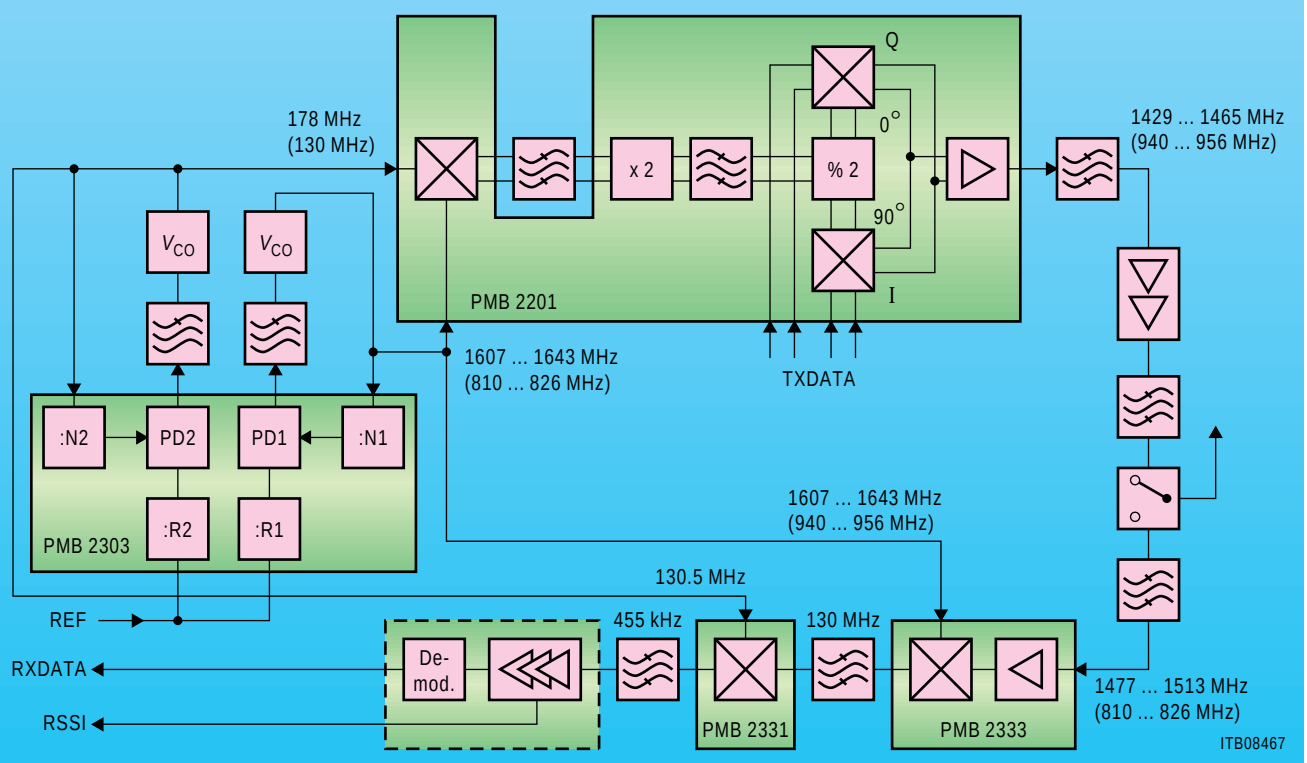

PDC Application PMB 2201 / PMB 2303 / PMB 2331 / PMB 2333

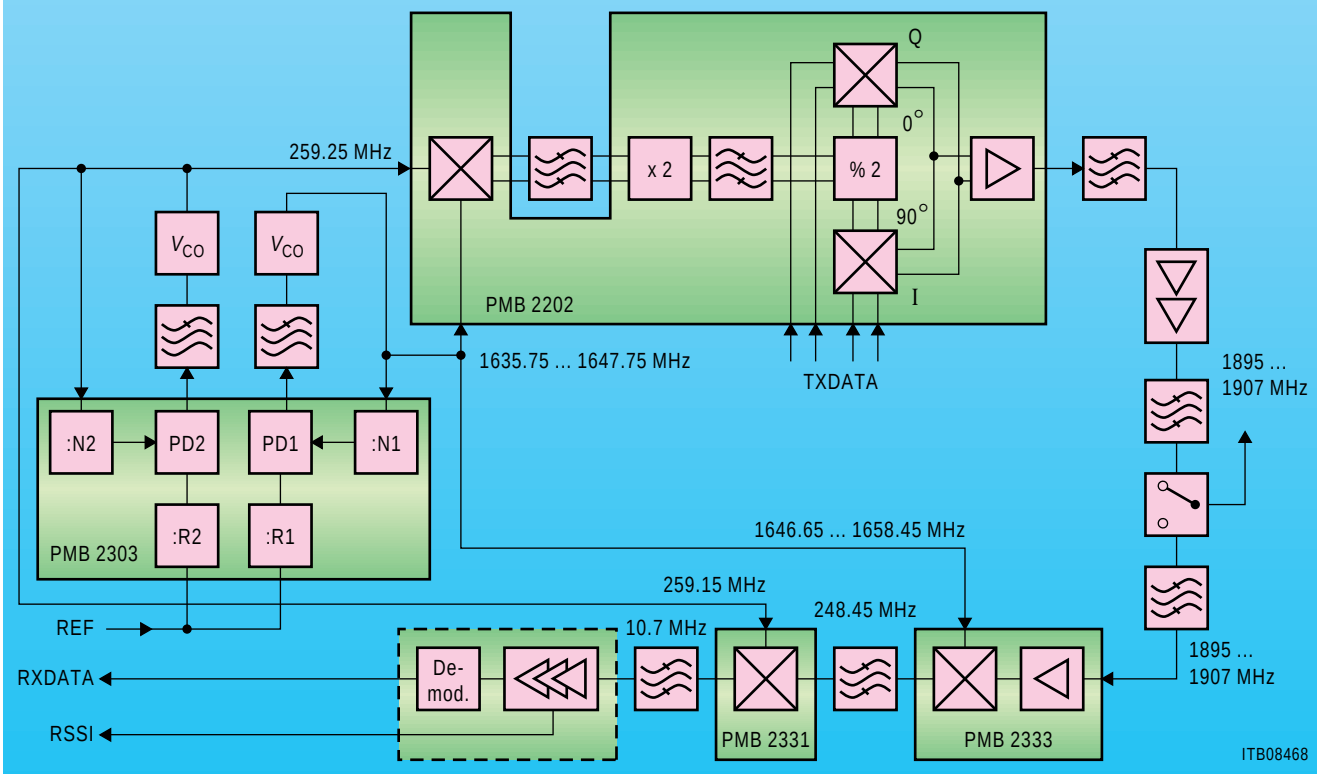

PHS Application PMB 2202 / PMB 2303 / PMB 2331 / PMB 2333