4-BIT PARALLEL-ACCESS SHIFT REGISTER 54/74178

SPEED/PACKAGE AVAILABILITY

54	F,W	74	A
		74S	A

PIN CONFIGURATION

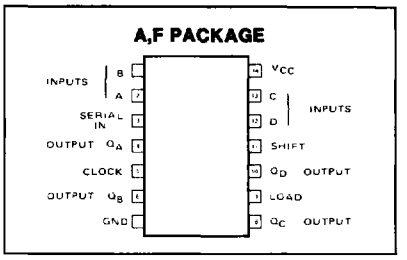

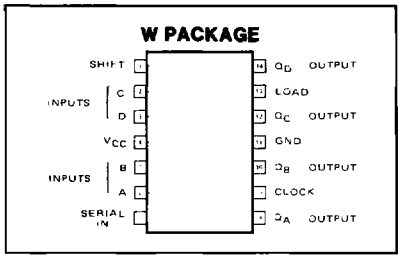

LOGIC DIAGRAM

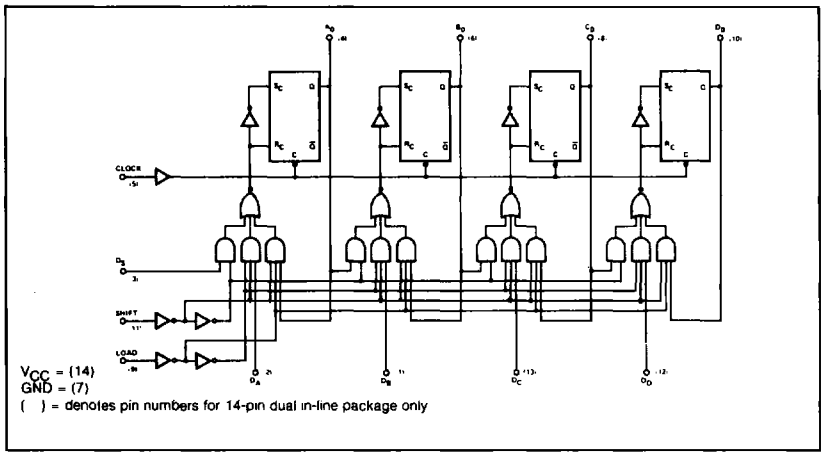

NOTE:
For electrical specifications, refer to 8270 and 82S70 data sheets.

LOGIC

4-BIT PARALLEL-ACCESS SHIFT REGISTER 54/74179

SPEED/PACKAGE AVAILABILITY

54	F,W	74	B
		74S	B

PIN CONFIGURATION

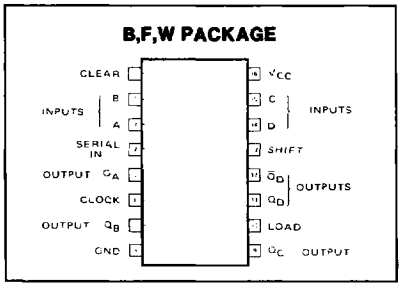

LOGIC DIAGRAM

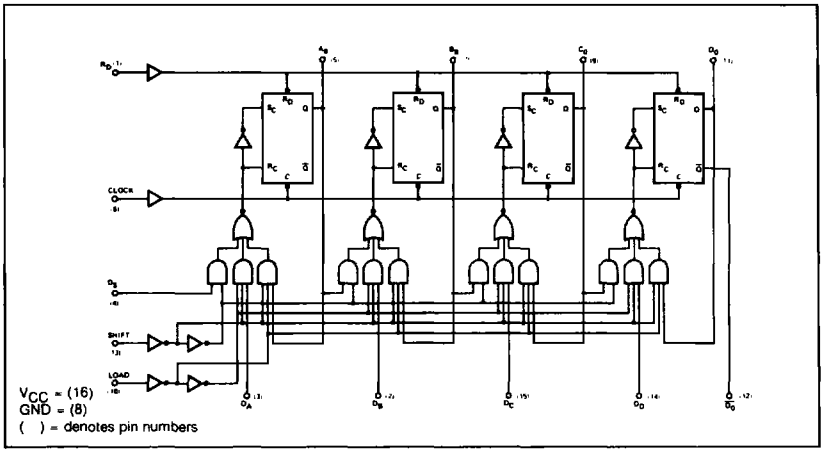

NOTE:
For electrical specifications, refer to 8271 and 82S71 data sheets.