Ordering number : ENA1970

SANYO Semiconductors

DATA SHEET

An ON Semiconductor Company

Bi-CMOS IC

LV5231CS — LED Driver

Overview

The LV5231CS is 16ch LED driver IC for the cell phones with built-in charge pump circuit.

Features

- LED driver ×16 (3-color ×2, MAIN, Flash) and on-chip switching regulator control circuit.
- Each LED driver current level can be adjusted independently over the serial bus.
- Support strobe mode of LED for flash.
- Ring tone signal and 3-color LEDs synchronization function.
- Gradation function (3-color LEDs)
- Miniature package

Function

- PWM switching regulator control circuit
  Built-in Triangular wave oscillator, Standard voltage, PWM comparator, Driver, DTC and short-circuit protection circuit.
  The output interception circuit at the overload is a timer latch method.
- LED driver
  LED driver for the main liquid crystal backlight ×6
  LED current can be switched indecently in 6-bit units (0.4 to 25.6mA)
  External current value control pin is provided.
  As for MLED6, a possible independent control (0.6 to 19.2mA)
  3-colorLEDs driver ×2
  LED current can be switched indecently in 5-bit units (0.5 to 16mA)
  Ring tone synchronization function (forced activation with SCTL: High)
  It corresponds to the information mode. RGBLED1 only, Built-in low current consumption internal oscillator
  Gradation function
  Twice current mode (1 to 32mA) RGBLED2 only
  LED driver for flash ×4
  LED current can be switched indecently in 4-bit units (2 to 32mA)
  At the strobe mode (6 to 96mA) (FCTL: High)
  Flash mode 1sec limiter (It is an automatic migration in a normal mode after about 1sec at continuousness High of FCTL).
  As for FLED3 and FLED4, a possible independent control.

■ Any and all SANYO Semiconductor Co.,Ltd. products described or contained herein are, with regard to "standard application", intended for the use as general electronics equipment (home appliances, AV equipment, communication device, office equipment, industrial equipment etc.). The products mentioned herein shall not be intended for use for any "special application" (medical equipment whose purpose is to sustain life, aerospace instrument, nuclear control device, burning appliances, transportation machine, traffic signal system, safety equipment etc.) that shall require extremely high level of reliability and can directly threaten human lives in case of failure or malfunction of the product or may cause harm to human bodies, nor shall they grant any guarantee thereof. If you should intend to use our products for applications outside the standard applications of our customer who is considering such use and/or outside the scope of our intended standard applications, please consult with us prior to the intended use. If there is no consultation or inquiry before the intended use, our customer shall be solely responsible for the use.

■ Specifications of any and all SANYO Semiconductor Co.,Ltd. products described or contained herein stipulate the performance, characteristics, and functions of the described products in the independent state, and are not guarantees of the performance, characteristics, and functions of the described products as mounted in the customer's products or equipment. To verify symptoms and states that cannot be evaluated in an independent device, the customer should always evaluate and test devices mounted in the customer's products or equipment.

SANYO Semiconductor Co., Ltd.
http://semicon.sanyo.com/en/network

Specifications

Maximum Ratings at Ta = 25°C

Parameter	Symbol	Conditions	Ratings	Unit
Maximum supply voltage	V_{CC} max		6	V
Allowable power dissipation	Pd max	* Mounted on a circuit board	850	mW
Operating temperature	Topr		-30 to +75	°C
Storage temperature	Tstg		-40 to +125	°C

* Specified board: 40mm × 50mm × 0.8mm, glass epoxy board. (2S2P (4-layer board))

Operating Conditions at Ta = 25°C

Parameter	Symbol	Conditions	Ratings	Unit
Supply voltage 1	V_{BAT}		3.0 to 4.5	V
Supply voltage 2	V_{DD}		1.65 to V_{BAT}	V

Electrical Characteristics at Ta = 25°C, V_{BAT} = 3.7V, V_{DD} = 2.6V unless otherwise specified.

Parameter	Symbol	Conditions	Ratings			Unit
			min	typ	max	
Consumption current						
Consumption current	$I_{CC}1$	V_{BAT}+V_{DD} consumption current RESET: Low (when reset)		0	5	μA
	$I_{CC}2$	V_{BAT}+V_{DD} consumption current RESET: High in serial default		0.5	5	μA
	$I_{CC}3$	V_{BAT}+V_{DD} consumption current RESET: High, STBY=1, When clock operates		1.2		mA
	$I_{CC}4$	V_{BAT}+V_{DD} consumption current When switching regulator operates		3.6	5	mA
	$I_{CC}5$	V_{BAT}+V_{DD} consumption current Information LED lighting mode Current consumption when turning it off		5	8	μA
Switching regulator control blocks Error Amp.						
IN pin internal voltage	V01	I_O=100mA, At 4.9V setting of output	4.7	4.9	5.1	V
LED pin voltage	V02	Voltage of LED pin at MLED current setting 20mA time. Load MLED current	0.25	0.40	0.55	V
Dormant period Coordination block						
Threshold voltage	V_D1	Duty cycle=100%	0.25	0.30	0.35	V
	V_D2	Duty cycle=Min	0.75	0.80	0.85	V
Output block						
Output LOW voltage	V_L	V_{IN}=0V, I_O=10mA		0.1	0.3	V
Output High voltage	V_H	V_{IN}=0V, I_O=10mA	V_{BAT}-0.3	V_{BAT}-0.1		V
Triangular wave oscillator block						
Oscillatory frequency	f_{OSC}		900	1000	1100	kHz
LED driver block						
Minimum output current value	$I_{MIN}1$	3-color 1, 2 LED driver, Current value setting Min., V_O=0.5V	0.2	0.5	1.0	mA
		3-color 2 LED driver, Current value setting Min. V_O=0.5V, Twice current mode	0.2	1.0	2.0	mA
	$I_{MIN}2$	MAIN LED driver, Current value setting Min. V_O=0.5V	0.1	0.4	1.0	mA
	$I_{MIN}3$	Flash LED driver, Current value setting Min., V_O=0.5V	0.5	2.0	4.0	mA
	$I_{MIN}4$	Flash LED driver, Current value setting Min., V_O=0.5V, FCTL=High	1	6	12	mA
	$I_{MIN}5$	LED driver(MLED6 a possible independent mode), Current value setting Min., V_O=0.5V	0.2	0.6	1.2	mA
	$I_{MIN}6$	LED driver(FLED3 and FLED4, a possible independent mode), Current value setting Min., V_O=0.5V	0.2	1.0	2.0	mA

Continued on next page.

Continued from preceding page.

Parameter	Symbol	Conditions	Ratings			Unit
			min	typ	max	
Maximum output current value	$I_{MAX}1$	3-color 1, 2 LED driver, Current value setting Max., V_O=0.5V	14.5	16.0	17.5	mA
		3-color 2 LED driver, Current value setting Max. V_O=0.5V, Twice current mode	29	32	35	mA
	$I_{MAX}2$	MAIN LED driver, Current value setting Max., V_O=0.5V	23.0	25.6	28.2	mA
	$I_{MAX}3$	Flash LED driver, Current value setting Max. V_O=0.55V	29	32	35	mA
	$I_{MAX}4$	Flash LED driver, Current value setting Max., V_O=0.6V, FCTL=High	87	96	105	mA
	$I_{MAX}5$	LED driver(MLED6 a possible independent mode), Current value setting Max., V_O=0.5V	17.4	19.2	21.0	mA
	$I_{MAX}6$	LED driver(FLED3 and FLED4, a possible independent mode), Current value setting Max., V_O=0.5V	29	32	35	mA
Maximum output current	ΔIL1	3-color LED driver, Maximum current setting, Voltage of PIN that becomes -10% of current value of V_O=2V time			0.3	V
	ΔIL2	MAIN LED driver, Maximum current setting, Voltage of PIN that becomes -10% of current value of V_O=2V time			0.25	V
	ΔIL3	Flash LED driver, Maximum current setting, Voltage of PIN that becomes -10% of current value of V_O=2V time			0.55	V
	ΔIL4	Flash LED driver, FCTL=High, Maximum current setting, Voltage of PIN that becomes -10% of current value of V_O=2V time			0.6	V
Leakage current	I_L1	3-color LED driver, LED driver: OFF, V_O=0.5V			1	μA
	I_L2	MAIN LED driver, LED driver: OFF, V_O=0.5V			1	μA
	I_L3	Flash LED driver, LED driver: OFF, V_O=0.5V			1	μA
Non-linearity error *1	LE1	All LED driver, Current value: to 3mA	-1		1	LSB
	LE2	All LED driver, Current value: 3 to 8mA	-1.5		1.5	LSB
	LE3	All LED driver, Current value: 8mA over	-10		10	%
Differential linearity error *2	DLE1	3-color 1, 2 LED driver, Flash LED driver, MLED6 a possible independent mode, FLED3 and FLED4 a possible independent mode	-1		1	LSB
	DLE1	MAIN LED driver	-1		2	LSB
Control circuit block						
High level 1	$V_{IN}H1$	Input High level, FCTL, SCTL	1.5		V_{BAT}	V
Low level 1	$V_{IN}L1$	Input Low level, FCTL, SCTL	0		0.3	V
High level 2	$V_{IN}H2$	Input High level, Serial signal input PIN	V_{DD}×0.8			V
Low level 2	$V_{IN}L2$	Input Low level, Serial signal input PIN	0		V_{DD}×0.2	V
High level 3	$V_{IN}H3$	Input High level, RESET	1.5			V
Low level 3	$V_{IN}L3$	Input Low level, RESET	0		0.3	V
High output level 1	V_H01	Output High level, INTO, I_L=1mA	V_{DD}-0.3			V
Low output level 1	V_L01	Output Low level, INTO, I_L=-1mA	0		0.3	V
High input current 4	I_HIN4	IN/OUT Current when V_{DD} voltage is charged to SCTL pin and FCTL pin	15	47	75	μA
Low input current 4	I_LIN4	IN/OUT Current when 0V is charged to SCTL pin and FCTL pin	-1	0	1	μA

*1. Non-linearity error: The difference between the actual and ideal current values.

*2. Differential linearity error: The difference between the actual and ideal increment when one low-order bi value is added.

Package Dimensions

unit : mm (typ)

3413

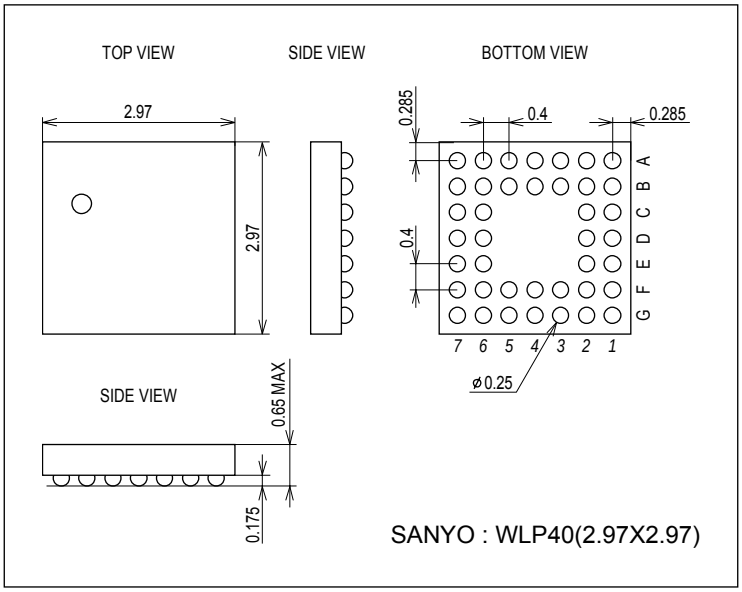

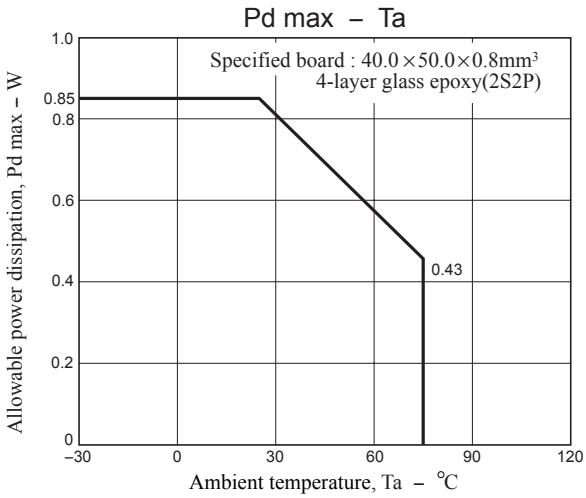

Block Diagram

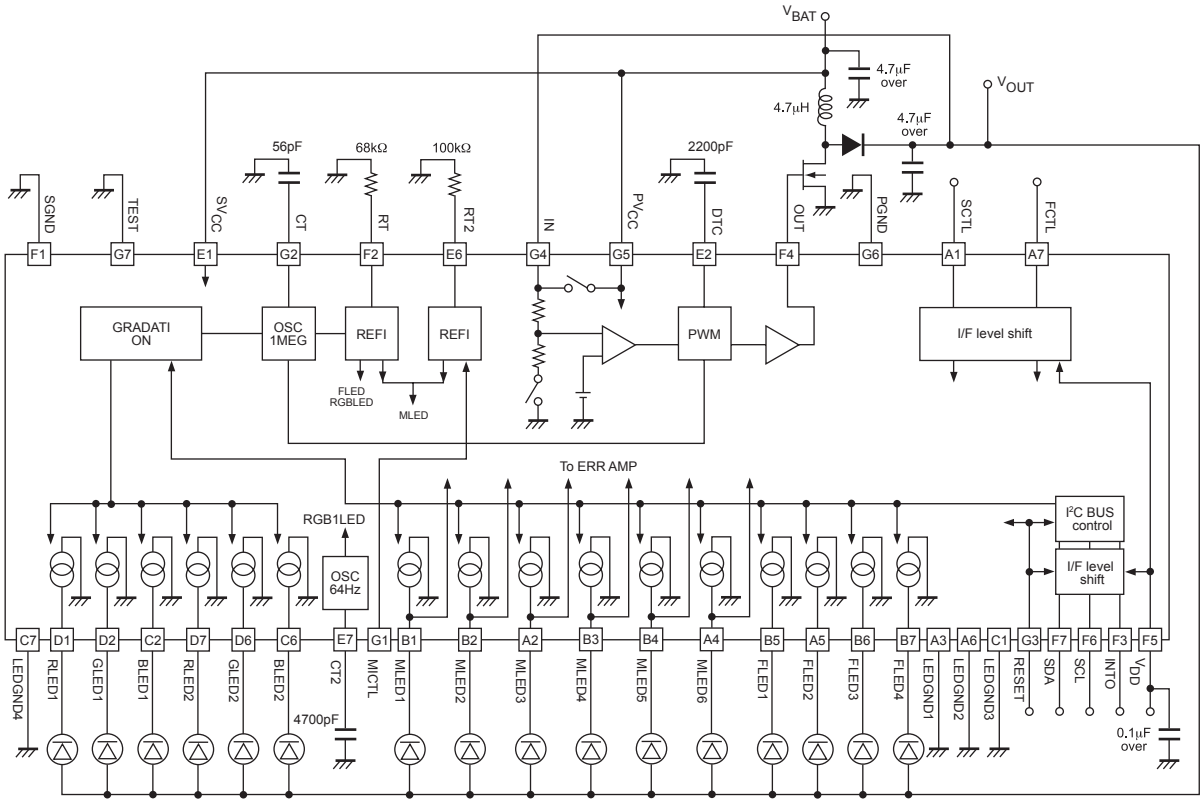

Pin Descriptions

	G	F	E	D	C	B	A	
1	MICTL	SGND	SV_{CC}	RLED1	LEDGND D3	MLED1	SCTL	1
2	CT	RT	DTC	GLED1	BLED1	MLED2	MLED3	2
3	RESET	INTO				MLED4	LEDGND D1	3
4	IN	OUT				MLED5	MLED6	4
5	PV_{CC}	V_{DD}				FLED1	FLED2	5
6	PGND	SCL	RT2	GLED2	BLED2	FLED3	LEDGND D2	6
7	TEST	SDA	CT2	RLED2	LEDGND D4	FLED4	FCTL	7
	G	F	E	D	C	B	A	

Pin No.	Pin name	Description	Protection diode vs. V_{BAT}	Protection diode vs. GND	Pin No.	Pin name	Description	Protection diode vs. V_{BAT}	Protection diode vs. GND
A1	SCTL	Ring tone synchronization signal input pin		○	D6	GLED2	GLED2 driver output pin		○
A2	MLED3	MLED3 driver output pin		○	D7	RLED2	RLED2 driver output pin		○
A3	LEDGND1	GND for LED driver			E1	SV_{CC}	Power supply pin for signal processing circuit		○
A4	MLED6	MLED6 driver output pin		○	E2	DTC	DTC setting pin	○	○
A5	FLED2	FLED2 driver output pin		○	E6	RT2	External control MLED current setting resistance connection pin	○	○
A6	LEDGND2	GND for LED driver			E7	CT2	Information mode frequency setting capacity connection pin	○	○
A7	FCTL			○	F1	SGND	GND for signal processing circuit		○
B1	MLED1	MLED1 driver output pin		○	F2	RT	Standard current setting resistance connection pin	○	○
B2	MLED2	MLED2 driver output pin		○	F3	INTO	INTO output pin	○	○
B3	MLED4	MLED4 driver output pin		○	F4	OUT	Switching regulator PWM signal output pin	○	○
B4	MLED5	MLED5 driver output pin		○	F5	V_{DD}	Power supply input pin for Serial signal I/F	○	○
B5	FLED1	FLED1 driver output pin		○	F6	SCL	I^2C clock signal input pin		○
B6	FLED3	FLED3 driver output pin		○	F7	SDA	I^2C data signal input pin		○
B7	FLED4	FLED4 driver output pin		○	G1	MICTL	External control MLED current control pin	○	○
C1	LEDGND3	GND for LED driver			G2	CT	Setting of frequency of oscillator capacity connection pin	○	○
C2	BLED1	BLED1 driver output pin		○	G3	RESET	RESET signal input pin		○
C6	BLED2	BLED2 driver output pin		○	G4	IN	Switching regulator output voltage input pin		○
C7	LEDGND4	GND for LED driver			G5	PV_{CC}	Power supply only for OUT pin internal driver		○
D1	RLED1	RLED1 driver output pin		○	G6	PGND	GND only for OUT pin internal driver		○
D2	GLED1	GLED1 driver output pin		○	G7	TEST	TEST pin	○	○

Serial Bus Communication Specifications

1) I^2C serial transfer timing conditions

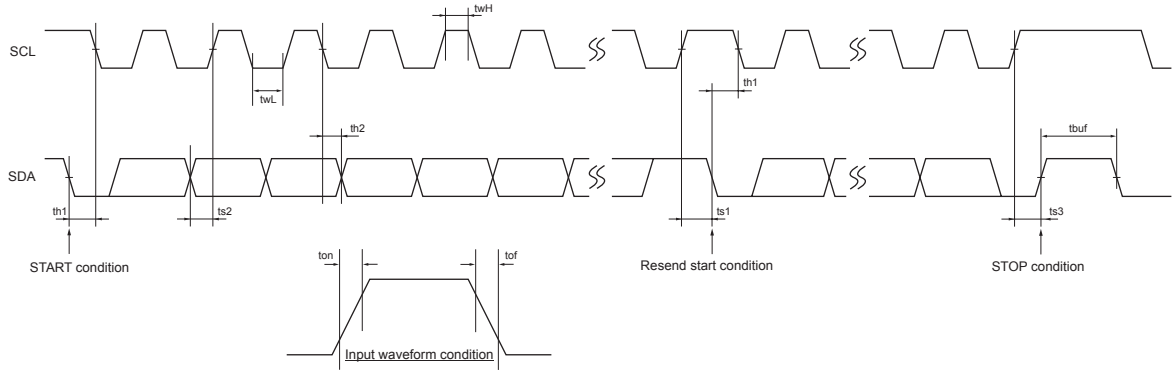

Standard mode

Parameter	Symbol	Conditions	Min.	Typ.	Max.	Unit
SCL clock frequency	fsc1	SCL clock frequency	0	-	100	kHz
Data setup time	ts1	SCL setup time relative to the fall of SDA	4.7	-	-	μs
	ts2	SDA setup time relative to the rise of SCL	250	-	-	ns
	ts3	SCL setup time relative to the rise of SDA	4.0	-	-	μs
Data hold time	th1	SCL hold time relative to the fall of SDA	4.0	-	-	μs
	th2	SDA hold time relative to the fall of SCL	0	-	-	μs
Pulse width	twL	SCL pulse width for the L period	4.7	-	-	μs
	twH	SCL pulse width for the H period	4.0	-	-	μs
Input waveform conditions	ton	SCL and SDA (input) rise time	-	-	1000	ns
	tof	SCL and SDA (input) fall time	-	-	300	ns
Bus free time	tbuf	Time between STOP condition and START condition	4.7	-	-	μs

High-speed mode

Parameter	Symbol	Conditions	Min.	Typ.	Max.	Unit
SCL clock frequency	fsc1	SCL clock frequency	0	-	400	kHz
Data setup time	ts1	SCL setup time relative to the fall of SDA	0.6	-	-	μs
	ts2	SDA setup time relative to the rise of SCL	100	-	-	ns
	ts3	SCL setup time relative to the rise of SDA	0.6	-	-	μs
Data hold time	th1	SCL hold time relative to the fall of SDA	0.6	-	-	μs
	th2	SDA hold time relative to the fall of SCL	0	-	-	μs
Pulse width	twL	SCL pulse width for the L period	1.3	-	-	μs
	twH	SCL pulse width for the H period	0.6	-	-	μs
Input waveform conditions	ton	SCL and SDA (input) rise time	-	-	300	ns
	tof	SCL and SDA (input) fall time	-	-	300	ns
Bus free time	tbuf	Time between STOP and START conditions	1.3	-	-	μs

2) I^2C bus transfer method

Start and stop conditions

During data transfer operation using the I^2C bus, SDA must basically be kept in constant state while SCL is “H” as shown below.

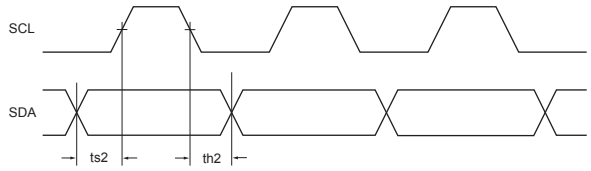

When data is not being transferred, both SCL and SDA are set in the “H” state.

When SCL=SDA is “H,” the start condition is established when SDA is changed from “H” to “L,” and access is started.

When SCL is “H,” the stop condition is established when SDA is changed from “L” to “H,” and access is ended.

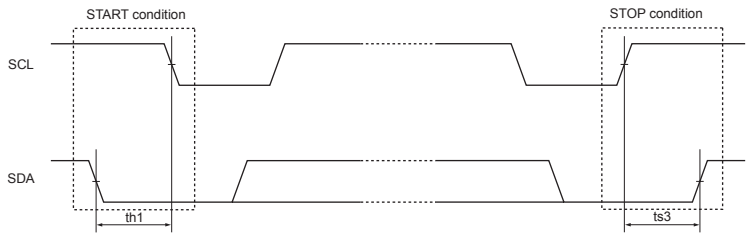

Data transfer and acknowledgement response

After the start condition has been established, the data is transferred one byte (8 bits) at a time.

Any number of bytes of data can be transferred continuously.

Each time the 8-bit data is transferred, the ACK signal is sent from the receive side to the send side. The ACK signal is issued when SDA on the send side is released and SDA on the receive side is set to “L” immediately after fall of the clock pulse at the SCL eighth bit of data transfer to “L.”

When the next 1-byte transfer is left in the receive state after sending the ACK signal from the receive side, the receive side releases SDA at the fall of the SCL ninth clock.

In the I^2C bus, there is no CE signal. In its place, a 7-bit slave address is assigned to each device, and the first byte of transfer is assigned to the command (R/W) representing the 7-bit address and subsequent transfer direction. Note that only write is valid in this IC. The 7-bit address is transferred sequentially starting with MSB, and the eighth bit is set to “L” which indicates a write.

In the LV5231CS the slave address is specified as "1110100"

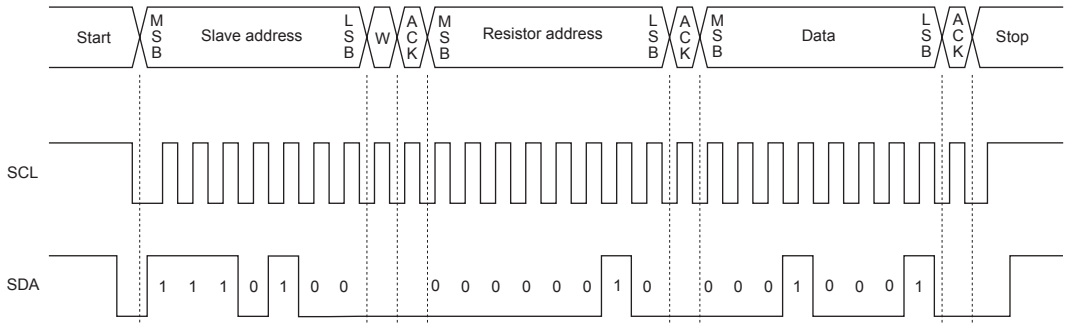

Serial mode setting

00h	0	0	0	0	0	0	0	0	0	D6	D5	D4	D3	D2	D1	D0

D0	STBY
0	OFF
1	ON

Standby mode setting

*Default

D1	RGSW
0	OFF
1	ON

SW regulator setting

*Default

D2	FXSW
0	OFF
1	Fixed

Output voltage mode setting

*Default

(Fixed: It fixes to the voltage set with serial VD.)

D3	MSW
0	OFF
1	ON

MAIN LED output setting

*Default

D4	MLED6
0	OFF
1	ON

MLED6 output setting

*Default

MLED6: Turn on MSW when you turn it on.

D5	MLED5
0	OFF
1	ON

MLED5 output setting

*Default

MLED5: Turn on MSW when you turn it on.

D6	MLED4
0	OFF
1	ON

MLED4 output setting

*Default

MLED4: Turn on MSW when you turn it on.

01h	0	0	0	0	0	0	0	1	D7	D6	D5	D4	D3	D2	D1	D0

D0	R1SW
0	OFF
1	ON

RLED1 output setting

*Default

D1	G1SW
0	OFF
1	ON

GLED1 output setting

*Default

D2	B1SW
0	OFF
1	ON

BLED1 output setting

*Default

D3	R2SW
0	OFF
1	ON

RLED2 output setting

*Default

D4	G2SW
0	OFF
1	ON

GLED2 output setting

*Default

D5	B2SW
0	OFF
1	ON

BLED2 output setting

*Default

D6	EXTSW
0	OFF
1	ON

Information mode setting

*Default Normal

For SLEEP at information

D7	RGB2X2
0	OFF
1	ON

RGBLED Twice current mode

*Default One time mode

Twice mode

02h	0	0	0	0	0	0	1	0	D7	D6	0	0	D3	D2	D1	D0

D0	F1SW
0	OFF
1	ON

Flash LED1 output setting

*Default

D1	F2SW
0	OFF
1	ON

Flash LED2 output setting

*Default

D2	F3SW
0	OFF
1	ON

Flash LED3 output setting

*Default

D3	F4SW
0	OFF
1	ON

Flash LED4 output setting

*Default

D6	SCTEN2
0	OFF
1	ON

SCTL signal enable RLED2, GLED2 and BLED2 setting

*Default

D7	SCTEN1
0	OFF
1	ON

SCTL signal enable RLED1, GLED1 and BLED1 setting

*Default

*SCTL turns three colors LED on and off by the external synchronous pin input because of the sound synchronization from sound source LSI etc.

* Effective/invalidity of the SCTL signal can be specified by SCTL signal enable setting.

The relation among SCTEN, SCTL, RLED, GLED, and BLED: as shown in the following table.

SCTEN1	SCTL pin	RLED1, BLED1, GLED1 state
0	Low	Turning off
0	High	Possible to light
1	Low	Possible to light
1	High	Possible to light

When turning it off, it compulsion turns it off regardless of the serial command.
Lighting by R1SW, G1SW and B1SW of the serial command, or automatic ON/OFF lighting in the gradation mode.

SCTEN2	SCTL pin	RLED2, BLED2, GLED2 state
0	Low	Turning off
0	High	Possible to light
1	Low	Possible to light
1	High	Possible to light

When turning it off, it compulsion turns it off regardless of the serial command.
Lighting by R1SW, G1SW and B1SW of the serial command, or automatic ON/OFF lighting in the gradation mode.

03h	0	0	0	0	0	0	1	1	D7	0	D5	D4	D3	D2	D1	D0

						MLED current value(mA)
D5	D4	D3	D2	D1	D0	MAIN[5:0]
0	0	0	0	0	0	0.4
0	0	0	0	0	1	0.8
0	0	0	0	1	0	1.2
0	0	0	0	1	1	1.6
0	0	0	1	0	0	2.0
0	0	0	1	0	1	2.4
0	0	0	1	1	0	2.8
0	0	0	1	1	1	3.2
0	0	1	0	0	0	3.6
0	0	1	0	0	1	4.0
0	0	1	0	1	0	4.4
0	0	1	0	1	1	4.8
0	0	1	1	0	0	5.2
0	0	1	1	0	1	5.6
0	0	1	1	1	0	6.0
0	0	1	1	1	1	6.4
0	1	0	0	0	0	6.8
0	1	0	0	0	1	7.2
0	1	0	0	1	0	7.6
0	1	0	0	1	1	8.0
0	1	0	1	0	0	8.4
0	1	0	1	0	1	8.8
0	1	0	1	1	0	9.2
0	1	0	1	1	1	9.6
0	1	1	0	0	0	10.0
0	1	1	0	0	1	10.4
0	1	1	0	1	0	10.8
0	1	1	0	1	1	11.2
0	1	1	1	0	0	11.6
0	1	1	1	0	1	12.0
0	1	1	1	1	0	12.4
0	1	1	1	1	1	12.8
1	0	0	0	0	0	13.2
1	0	0	0	0	1	13.6
1	0	0	0	1	0	14.0
1	0	0	0	1	1	14.4
1	0	0	1	0	0	14.8
1	0	0	1	0	1	15.2
1	0	0	1	1	0	15.6
1	0	0	1	1	1	16.0
1	0	1	0	0	0	16.4
1	0	1	0	0	1	16.8
1	0	1	0	1	0	17.2
1	0	1	0	1	1	17.6
1	0	1	1	0	0	18.0
1	0	1	1	0	1	18.4
1	0	1	1	1	0	18.8
1	0	1	1	1	1	19.2
1	1	0	0	0	0	19.6
1	1	0	0	0	1	20.0
1	1	0	0	1	0	20.4
1	1	0	0	1	1	20.8
1	1	0	1	0	0	21.2

MAIN current value setting

*Default

Continued on next page.

Continued from preceding page.

						MLED current value(mA)
D5	D4	D3	D2	D1	D0	MAIN[5:0]
1	1	0	1	0	1	21.6
1	1	0	1	1	0	22.0
1	1	0	1	1	1	22.4
1	1	1	0	0	0	22.8
1	1	1	0	0	1	23.2
1	1	1	0	1	0	23.6
1	1	1	0	1	1	24.0
1	1	1	1	0	0	24.4
1	1	1	1	0	1	24.8
1	1	1	1	1	0	25.2
1	1	1	1	1	1	25.6

D7	VODET
0	-
1	Re-detection

Mode setting that judges automatic pressure again

*Default

It becomes "0" and it enters the state of the acceptance after it detects it again.

04h	0	0	0	0	0	1	0	0	D7	D6	D5	D4	D3	D2	D1	D0

D0	RGB1VO
0	No boost
1	Auto boost

RLED1, GLED1 and BLED1 ON time boost setting

*Default

Automatic boost after LED pin LOW is detected. Boost is fixed voltage boost.

D1	RGB2VO
0	No boost
1	Auto boost

RLED2, GLED2, BLED2 ON time boost setting

*Default

Automatic boost after LED pin LOW is detected. Boost is fixed voltage boost.

D2	FLVO
0	No boost
1	Auto boost

FLED1, FLED2, FLED3, FLED4 ON time boost setting. FCTL=L

*Default

Automatic boost after LED pin LOW is detected. Boost is fixed voltage boost.

*It excludes it at an independent mode of FLED3 and FLED4.

It doesn't boost it automatically at an independent mode. Set the manual operation with FXSW.

D3	FHVO
0	Boost(Fixed voltage)
1	Boost(Auto output voltage)

FLED1, FLED2, FLED3, FLED4 ON time boost setting. FCTL=H

*Default

LED pin LOW is detected and the pressure voltage is changeable.

*It excludes it at an independent mode of FLED3 and FLED4.

It doesn't boost it automatically at an independent mode. Set the manual operation with FXSW.

D4	FXVO
0	LED pin fixed voltage boost
1	Fixed voltage boost

MLED auto booster setting.

*Default

*It excludes it at an independent mode of MLED6.

It doesn't boost it automatically at an independent mode. Set the manual operation with FXSW.

Continued on next page.

Continued from preceding page.

			DC/DC output voltage(V)
D7	D6	D5	VD[2:0]
0	0	0	4.3
0	0	1	4.5
0	1	0	4.7
0	1	1	4.9
1	0	0	5.1
1	0	1	5.3
1	1	0	5.5
1	1	1	Not possible to use

Output DC setting

*Default

05h	0	0	0	0	0	1	0	1	D7	D6	D5	0	D3	D2	D1	D0

				MICTL voltage at 50% in MLED current time
D3	D2	D1	D0	MICTLC[3:0]
0	0	0	0	1.10V
0	0	0	1	0.98V
0	0	1	0	0.86V
0	0	1	1	0.74V
0	1	0	0	0.62V
0	1	0	1	0.50V
0	1	1	0	0.38V
0	1	1	1	1.24V
1	0	0	0	1.38V
1	0	0	1	1.51V
1	0	1	0	1.64V
1	0	1	1	1.77V
1	1	0	0	1.90v
1	1	0	1	2.04V
1	1	1	0	2.16V
1	1	1	1	Not possible to use

MICTL adjustment

*Default

MICTL input voltage value to which MLED current attenuates by 50%

RT2=100kΩ

D5	MISW
0	OFF
1	ON

MICTL control

*Default MICTL pin input invalidity

MICTL pin input effective

D6	ICKSW
0	OFF
1	ON

Information modal frequency switch

*Default One cycle 2sec.

One cycle 4sec.

D7	CHSW
0	Normal
1	Charge time

Information mode control when being charging it

*Default

06h	0	0	0	0	0	1	1	0	D7	D6	D5	D4	D3	D2	D1	D0

				FLED current value(mA)
D3	D2	D1	D0	FLC[3:0]
0	0	0	0	2.0
0	0	0	1	4.0
0	0	1	0	6.0
0	0	1	1	8.0
0	1	0	0	10.0
0	1	0	1	12.0
0	1	1	0	14.0
0	1	1	1	16.0
1	0	0	0	18.0
1	0	0	1	20.0
1	0	1	0	22.0
1	0	1	1	24.0
1	1	0	0	26.0
1	1	0	1	28.0
1	1	1	0	30.0
1	1	1	1	32.0

Flash LED ordinary mode current setting

*Default

				FLED current value(mA)
D7	D6	D5	D4	FHC[3:0]
0	0	0	0	6.0
0	0	0	1	12.0
0	0	1	0	18.0
0	0	1	1	24.0
0	1	0	0	30.0
0	1	0	1	36.0
0	1	1	0	42.0
0	1	1	1	48.0
1	0	0	0	54.0
1	0	0	1	60.0
1	0	1	0	66.0
1	0	1	1	72.0
1	1	0	0	78.0
1	1	0	1	84.0
1	1	1	0	90.0
1	1	1	1	96.0

Flash LED strobe mode current value setting(SCTL=H is effective)

*Default

07h	0	0	0	0	0	1	1	1	D7	0	0	D4	D3	D2	D1	D0

					RLED1 current value(mA)
D4	D3	D2	D1	D0	R1C[4:0]
0	0	0	0	0	0.5
0	0	0	0	1	1.0
0	0	0	1	0	1.5
0	0	0	1	1	2.0
0	0	1	0	0	2.5
0	0	1	0	1	3.0
0	0	1	1	0	3.5
0	0	1	1	1	4.0
0	1	0	0	0	4.5
0	1	0	0	1	5.0
0	1	0	1	0	5.5
0	1	0	1	1	6.0
0	1	1	0	0	6.5
0	1	1	0	1	7.0
0	1	1	1	0	7.5
0	1	1	1	1	8.0
1	0	0	0	0	8.5
1	0	0	0	1	9.0
1	0	0	1	0	9.5
1	0	0	1	1	10.0
1	0	1	0	0	10.5
1	0	1	0	1	11.0
1	0	1	1	0	11.5
1	0	1	1	1	12.0
1	1	0	0	0	12.5
1	1	0	0	1	13.0
1	1	0	1	0	13.5
1	1	0	1	1	14.0
1	1	1	0	0	14.5
1	1	1	0	1	15.0
1	1	1	1	0	15.5
1	1	1	1	1	16.0

RLED1 current value setting

*Default

D7	R3SW
0	OFF
1	ON

Information RLED1 point light

*Default

08h	0	0	0	0	1	0	0	0	D7	0	0	D4	D3	D2	D1	D0

					GLED1 current value(mA)
D4	D3	D2	D1	D0	G1C[4:0]
0	0	0	0	0	0.5
0	0	0	0	1	1.0
0	0	0	1	0	1.5
0	0	0	1	1	2.0
0	0	1	0	0	2.5
0	0	1	0	1	3.0
0	0	1	1	0	3.5
0	0	1	1	1	4.0
0	1	0	0	0	4.5
0	1	0	0	1	5.0
0	1	0	1	0	5.5
0	1	0	1	1	6.0
0	1	1	0	0	6.5
0	1	1	0	1	7.0
0	1	1	1	0	7.5
0	1	1	1	1	8.0
1	0	0	0	0	8.5
1	0	0	0	1	9.0
1	0	0	1	0	9.5
1	0	0	1	1	10.0
1	0	1	0	0	10.5
1	0	1	0	1	11.0
1	0	1	1	0	11.5
1	0	1	1	1	12.0
1	1	0	0	0	12.5
1	1	0	0	1	13.0
1	1	0	1	0	13.5
1	1	0	1	1	14.0
1	1	1	0	0	14.5
1	1	1	0	1	15.0
1	1	1	1	0	15.5
1	1	1	1	1	16.0

GLED1 current value setting

*Default

D7	G3SW
0	OFF
1	ON

Information GLED1 point light

*Default

09h	0	0	0	0	1	0	0	1	D7	0	0	D4	D3	D2	D1	D0

					BLED1 current value(mA)
D4	D3	D2	D1	D0	B1C[4:0]
0	0	0	0	0	0.5
0	0	0	0	1	1.0
0	0	0	1	0	1.5
0	0	0	1	1	2.0
0	0	1	0	0	2.5
0	0	1	0	1	3.0
0	0	1	1	0	3.5
0	0	1	1	1	4.0
0	1	0	0	0	4.5
0	1	0	0	1	5.0
0	1	0	1	0	5.5
0	1	0	1	1	6.0
0	1	1	0	0	6.5
0	1	1	0	1	7.0
0	1	1	1	0	7.5
0	1	1	1	1	8.0
1	0	0	0	0	8.5
1	0	0	0	1	9.0
1	0	0	1	0	9.5
1	0	0	1	1	10.0
1	0	1	0	0	10.5
1	0	1	0	1	11.0
1	0	1	1	0	11.5
1	0	1	1	1	12.0
1	1	0	0	0	12.5
1	1	0	0	1	13.0
1	1	0	1	0	13.5
1	1	0	1	1	14.0
1	1	1	0	0	14.5
1	1	1	0	1	15.0
1	1	1	1	0	15.5
1	1	1	1	1	16.0

BLED1 current value setting

*Default

D7	B3SW
0	OFF
1	ON

Information BLED1 point light

*Default

0ah	0	0	0	0	1	0	1	0	0	0	0	D4	D3	D2	D1	D0

					RLED2 current value(mA)
D4	D3	D2	D1	D0	R2C[4:0]
0	0	0	0	0	0.5
0	0	0	0	1	1.0
0	0	0	1	0	1.5
0	0	0	1	1	2.0
0	0	1	0	0	2.5
0	0	1	0	1	3.0
0	0	1	1	0	3.5
0	0	1	1	1	4.0
0	1	0	0	0	4.5
0	1	0	0	1	5.0
0	1	0	1	0	5.5
0	1	0	1	1	6.0
0	1	1	0	0	6.5
0	1	1	0	1	7.0
0	1	1	1	0	7.5
0	1	1	1	1	8.0
1	0	0	0	0	8.5
1	0	0	0	1	9.0
1	0	0	1	0	9.5
1	0	0	1	1	10.0
1	0	1	0	0	10.5
1	0	1	0	1	11.0
1	0	1	1	0	11.5
1	0	1	1	1	12.0
1	1	0	0	0	12.5
1	1	0	0	1	13.0
1	1	0	1	0	13.5
1	1	0	1	1	14.0
1	1	1	0	0	14.5
1	1	1	0	1	15.0
1	1	1	1	0	15.5
1	1	1	1	1	16.0

RLED2 current value setting

*Default

0bh	0	0	0	0	1	0	1	1	0	0	0	D4	D3	D2	D1	D0

					GLED2 current value(mA)
D4	D3	D2	D1	D0	G2C[4:0]
0	0	0	0	0	0.5
0	0	0	0	1	1.0
0	0	0	1	0	1.5
0	0	0	1	1	2.0
0	0	1	0	0	2.5
0	0	1	0	1	3.0
0	0	1	1	0	3.5
0	0	1	1	1	4.0
0	1	0	0	0	4.5
0	1	0	0	1	5.0
0	1	0	1	0	5.5
0	1	0	1	1	6.0
0	1	1	0	0	6.5
0	1	1	0	1	7.0
0	1	1	1	0	7.5
0	1	1	1	1	8.0
1	0	0	0	0	8.5
1	0	0	0	1	9.0
1	0	0	1	0	9.5
1	0	0	1	1	10.0
1	0	1	0	0	10.5
1	0	1	0	1	11.0
1	0	1	1	0	11.5
1	0	1	1	1	12.0
1	1	0	0	0	12.5
1	1	0	0	1	13.0
1	1	0	1	0	13.5
1	1	0	1	1	14.0
1	1	1	0	0	14.5
1	1	1	0	1	15.0
1	1	1	1	0	15.5
1	1	1	1	1	16.0

GLED2 current value setting

*Default

0ch	0	0	0	0	1	1	0	0	0	0	0	D4	D3	D2	D1	D0

					BLED2 current value(mA)
D4	D3	D2	D1	D0	B2C[4:0]
0	0	0	0	0	0.5
0	0	0	0	1	1.0
0	0	0	1	0	1.5
0	0	0	1	1	2.0
0	0	1	0	0	2.5
0	0	1	0	1	3.0
0	0	1	1	0	3.5
0	0	1	1	1	4.0
0	1	0	0	0	4.5
0	1	0	0	1	5.0
0	1	0	1	0	5.5
0	1	0	1	1	6.0
0	1	1	0	0	6.5
0	1	1	0	1	7.0
0	1	1	1	0	7.5
0	1	1	1	1	8.0
1	0	0	0	0	8.5
1	0	0	0	1	9.0
1	0	0	1	0	9.5
1	0	0	1	1	10.0
1	0	1	0	0	10.5
1	0	1	0	1	11.0
1	0	1	1	0	11.5
1	0	1	1	1	12.0
1	1	0	0	0	12.5
1	1	0	0	1	13.0
1	1	0	1	0	13.5
1	1	0	1	1	14.0
1	1	1	0	0	14.5
1	1	1	0	1	15.0
1	1	1	1	0	15.5
1	1	1	1	1	16.0

BLED2 current value setting

*Default

0dh	0	0	0	0	1	1	0	1	D7	0	0	D4	D3	D2	D1	D0

					MLED6 current value(mA)
D4	D3	D2	D1	D0	M6SPC[4:0]
0	0	0	0	0	0.6
0	0	0	0	1	1.2
0	0	0	1	0	1.8
0	0	0	1	1	2.4
0	0	1	0	0	3.0
0	0	1	0	1	3.6
0	0	1	1	0	4.2
0	0	1	1	1	4.8
0	1	0	0	0	5.4
0	1	0	0	1	6.0
0	1	0	1	0	6.6
0	1	0	1	1	7.2
0	1	1	0	0	7.8
0	1	1	0	1	8.4
0	1	1	1	0	9.0
0	1	1	1	1	9.6
1	0	0	0	0	10.2
1	0	0	0	1	10.8
1	0	0	1	0	11.4
1	0	0	1	1	12.0
1	0	1	0	0	12.6
1	0	1	0	1	13.2
1	0	1	1	0	13.8
1	0	1	1	1	14.4
1	1	0	0	0	15.0
1	1	0	0	1	15.6
1	1	0	1	0	16.2
1	1	0	1	1	16.8
1	1	1	0	0	17.4
1	1	1	0	1	18.0
1	1	1	1	0	18.6
1	1	1	1	1	19.2

MLED6 Independent mode current value setting

*Default

D7	M6SP
0	OFF
1	ON

MLED6 Independent mode setting

*Default

*M6SW: 1, M6SP: 1 is MLED6 independent mode lighting

0eh	0	0	0	0	1	1	1	0	D7	0	0	D4	D3	D2	D1	D0

					FLED3 current value(mA)
D4	D3	D2	D1	D0	F3SPC[4:0]
0	0	0	0	0	1.0
0	0	0	0	1	2.0
0	0	0	1	0	3.0
0	0	0	1	1	4.0
0	0	1	0	0	5.0
0	0	1	0	1	6.0
0	0	1	1	0	7.0
0	0	1	1	1	8.0
0	1	0	0	0	9.0
0	1	0	0	1	10.0
0	1	0	1	0	11.0
0	1	0	1	1	12.0
0	1	1	0	0	13.0
0	1	1	0	1	14.0
0	1	1	1	0	15.0
0	1	1	1	1	16.0
1	0	0	0	0	17.0
1	0	0	0	1	18.0
1	0	0	1	0	19.0
1	0	0	1	1	20.0
1	0	1	0	0	21.0
1	0	1	0	1	22.0
1	0	1	1	0	23.0
1	0	1	1	1	24.0
1	1	0	0	0	25.0
1	1	0	0	1	26.0
1	1	0	1	0	27.0
1	1	0	1	1	28.0
1	1	1	0	0	29.0
1	1	1	0	1	30.0
1	1	1	1	0	31.0
1	1	1	1	1	32.0

FLED3 Independent mode current value setting

*Default

D7	F3SP
0	OFF
1	ON

FLED3 Independent mode setting

*Default

*F3SW: 1, F3SP: 1 is FLED3 independent mode lighting

0fh	0	0	0	0	1	1	1	1	D7	0	0	D4	D3	D2	D1	D0

					FLED4 current value(mA)
D4	D3	D2	D1	D0	F4SPC[4:0]
0	0	0	0	0	1.0
0	0	0	0	1	2.0
0	0	0	1	0	3.0
0	0	0	1	1	4.0
0	0	1	0	0	5.0
0	0	1	0	1	6.0
0	0	1	1	0	7.0
0	0	1	1	1	8.0
0	1	0	0	0	9.0
0	1	0	0	1	10.0
0	1	0	1	0	11.0
0	1	0	1	1	12.0
0	1	1	0	0	13.0
0	1	1	0	1	14.0
0	1	1	1	0	15.0
0	1	1	1	1	16.0
1	0	0	0	0	17.0
1	0	0	0	1	18.0
1	0	0	1	0	19.0
1	0	0	1	1	20.0
1	0	1	0	0	21.0
1	0	1	0	1	22.0
1	0	1	1	0	23.0
1	0	1	1	1	24.0
1	1	0	0	0	25.0
1	1	0	0	1	26.0
1	1	0	1	0	27.0
1	1	0	1	1	28.0
1	1	1	0	0	29.0
1	1	1	0	1	30.0
1	1	1	1	0	31.0
1	1	1	1	1	32.0

FLED4 Independent mode current value setting

*Default

D7	F4SP
0	OFF
1	ON

FLED4 Independent mode setting

*Default

*F4SW: 1, F4SP: 1 is FLED4 independent mode lighting

10h	0	0	0	1	0	0	0	0	D7	0	D5	D4	D3	D2	D1	D0

			Fade IN time
D2	D1	D0	FIN1[2:0]
0	0	0	No slope
0	0	1	Slope 1/32
0	1	0	1/16
0	1	1	1/8
1	0	0	1/4
1	0	1	1/2
1	1	0	3/4
1	1	1	Max slope

RLED1, GLED1 and BLED1 is lighting slope setting

*Default

Slope time MAX is 1/2 of the settings during the AT1 time.

			Fade out time
D5	D4	D3	FOUT1[2:0]
0	0	0	No slope
0	0	1	Slope 1/32
0	1	0	1/16
0	1	1	1/8
1	0	0	1/4
1	0	1	1/2
1	1	0	3/4
1	1	1	Max slope

RLED1, GLED1 and BLED1 is light off slope setting

*Default

Slope time MAX is 1/2 of the settings during the AT1 time.

D7	SYNC
0	OFF
1	ON

Setting of synchronous mode of RLED1, GLED1, BLED1 and RLED2, GLED2, BLED2

*Default

The operation of RLED2, GLED2, BLED2, becomes it as well as RLED1, GLED1, BLED1.

As for the setting of the fade setting, the setting at the gradation time, the turning on position, and the turning off position, RLED1, GLED1 and BLED1 is used.

11h	0	0	0	1	0	0	0	1	0	D6	D5	D4	D3	D2	D1	D0

			Gradation cycle
D2	D1	D0	AT1[2:0]
0	0	0	0.25s
0	0	1	0.5s
0	1	0	1s
0	1	1	2s
1	0	0	4s
1	0	1	8s
1	1	x	-

RLED1, GLED1 and BLED1 automatic ON/OFF cycle setting

*Default

D3	GRON1
0	OFF
1	ON

RLED1, GLED1 and BLED1 automatic ON/OFF function setting

*Default

D4	GR1M1
0	OFF
1	ON

One time of RLED1, GLED1 and BLED1 gradation execution

*Default

D5	GRON2
0	OFF
1	ON

RLED2, GLED2 and BLED2 automatic ON/OFF function setting

*Default

D6	GR1M2
0	OFF
1	ON

One time of RLED2, GLED2 and BLED2 gradation execution

*Default

12h	0	0	0	1	0	0	1	0	0	0	D5	D4	D3	D2	D1	D0

R1Aoff [5:0] D5-0 RLED1 automatic operation OFF position setting (Default All0)

13h	0	0	0	1	0	0	1	1	0	0	D5	D4	D3	D2	D1	D0

R1Aon [5:0] D5-0 RLED1 automatic operation ON position setting (Default All0)
R1Aoff=R1Aon all cycle turning off

14h	0	0	0	1	0	1	0	0	0	0	D5	D4	D3	D2	D1	D0

R1Aoff [5:0] D5-0 GLED1 automatic operation OFF position setting (Default All0)

15h	0	0	0	1	0	1	0	1	0	0	D5	D4	D3	D2	D1	D0

R1Aon [5:0] D5-0 GLED1 automatic operation ON position setting (Default All0)
R1Aoff=R1Aon all cycle turning off

16h	0	0	0	1	0	1	1	0	0	0	D5	D4	D3	D2	D1	D0

R1Aoff [5:0] D5-0 BLED1 automatic operation OFF position setting (Default All0)

17h	0	0	0	1	0	1	1	1	0	0	D5	D4	D3	D2	D1	D0

R1Aon [5:0] D5-0 BLED1 automatic operation ON position setting (Default All0)
R1Aoff=R1Aon all cycle turning off

18h	0	0	0	1	1	0	0	0	0	0	D5	D4	D3	D2	D1	D0

			Fade IN time
D2	D1	D0	FIN2[2:0]
0	0	0	No slope
0	0	1	Slope 1/32
0	1	0	1/16
0	1	1	1/8
1	0	0	1/4
1	0	1	1/2
1	1	0	3/4
1	1	1	Max slope

RLED2, GLED2 and BLED2 is lighting slope setting

*Default

Slope time MAX is 1/2 of the settings during the AT2 time.

			Fade out time
D5	D4	D3	FOUT2[2:0]
0	0	0	No slope
0	0	1	Slope 1/32
0	1	0	1/16
0	1	1	1/8
1	0	0	1/4
1	0	1	1/2
1	1	0	3/4
1	1	1	Max slope

RLED2, GLED2 and BLED2 is light off slope setting

*Default

Slope time MAX is 1/2 of the settings during the AT2 time.

19h	0	0	0	1	1	0	0	1	0	0	0	0	0	D2	D1	D0

		Gradation cycle
D2	D1	D0	AT2[2:0]
0	0	0	0.25s
0	0	1	0.5s
0	1	0	1s
0	1	1	2s
1	0	0	4s
1	0	1	8s
1	1	x	-

RLED2, GLED2 and BLED2 automatic ON/OFF cycle setting

*Default

1ah	0	0	0	1	1	0	1	0	0	0	D5	D4	D3	D2	D1	D0

R2Aoff [5:0] D5-0 RLED2 automatic operation OFF position setting (Default All0)

1bh	0	0	0	1	1	0	1	1	0	0	D5	D4	D3	D2	D1	D0

R2Aon [5:0] D5-0 RLED2 automatic operation ON position setting (Default All0)
R2Aoff=R1Aon all cycle turning off

1ch	0	0	0	1	1	1	0	0	0	0	D5	D4	D3	D2	D1	D0

R2Aoff [5:0] D5-0 GLED2 automatic operation OFF position setting (Default All0)

1dh	0	0	0	1	1	1	0	1	0	0	D5	D4	D3	D2	D1	D0

R2Aon [5:0] D5-0 GLED2 automatic operation ON position setting (Default All0)
R2Aoff=R1Aon all cycle turning off

1eh	0	0	0	1	1	1	1	0	0	0	D5	D4	D3	D2	D1	D0

R2Aoff [5:0] D5-0 BLED2 automatic operation OFF position setting (Default All0)

1fh	0	0	0	1	1	1	1	1	0	0	D5	D4	D3	D2	D1	D0

R2Aon [5:0] D5-0 BLED2 automatic operation ON position setting (Default All0)
R2Aoff=R1Aon all cycle turning off

20h	0	0	1	0	0	0	0	0	D7	0	0	0	D3	D2	D1	D0

D0	INTM1
0	OFF
1	ON

INT mask setting. Mask of interrupt factor 1(RGBLED1 fade end)

*Default

D1	INTM2
0	OFF
1	ON

INT mask setting. Mask of interrupt factor 2(RGBLED1 gradation end)

*Default

D2	INTM3
0	OFF
1	ON

INT mask setting. Mask of interrupt factor 3(RGBLED2 fade end)

*Default

D3	INTM4
0	OFF
1	ON

INT mask setting. Mask of interrupt factor 4(RGBLED2 gradation end)

*Default

D7	INTCR
0	INT acceptance
1	INT clear

INTCR (INT clear)

*Default

*It becomes "0" and it enters the state of the INT acceptance after INT is cleared.

Precautions for serial transmission and usage note

* The switching regulator must start when it is LED driver OFF.
* Set the setting of the gradation in the state of gradation OFF.
* Set the setting of the MLED4, MLED5 and MLED6 in the state of MSW ON.

- When LED pin unused
  Connect the LED driver pin with V_{BAT} or GND when you do not connect LED with the LED pin.
- Information LED lighting
  Impress the V_{DD} voltage when information LED lights because the oscillator for information LED lighting is operated by the V_{DD} voltage.
- FLED use time
  Using FLED (An independent mode is excluded) must use FLED1.
  The use of FLED2, 3, and 4 is prohibited by FLED1:OFF.

LV5231CS serial map

• Table upper row: Register name Table the lower: Default value

	Register address								data							
	A7	A6	A5	A4	A3	A2	A1	A0	D7	D6	D5	D4	D3	D2	D1	D0
00h	0	0	0	0	0	0	0	0	×	MLED4	MLED5	MLED6	MSW	FXSW	RGSW	STBY
									0	0	0	0	0	0	0	0
01h	0	0	0	0	0	0	0	1	RGB2x2	EXTSW	B2SW	G2SW	R2SW	B1SW	G1SW	R1SW
									0	0	0	0	0	0	0	0
02h	0	0	0	0	0	0	1	0	SCTEN1	SCTEN2	×	×	F4SW	F3SW	F2SW	D1SW
									0	0	0	0	0	0	0	0
03h	0	0	0	0	0	0	1	1	VODET	×	MAIN[5:0]					
									0	0	0	0	0	0	0	0
04h	0	0	0	0	0	1	0	0	VD[2:0]			FXVO	FHVO	FLVO	RGB2VO	RGB1VO
									0	0	0	0	0	0	0	0
05h	0	0	0	0	0	1	0	1	CHSW	ICKSW	MISW	×	MICTLC[3:0]			
									0	0	0	0	0	0	0	0
06h	0	0	0	0	0	1	1	0	FHC[3:0]				FLC[3:0]			
									0	0	0	0	0	0	0	0
07h	0	0	0	0	0	1	1	1	R3SW	×	×	R1C[4:0]				
									0	0	0	0	0	0	0	0
08h	0	0	0	0	1	0	0	0	G3SW	×	×	G1C[4:0]				
									0	0	0	0	0	0	0	0
09h	0	0	0	0	1	0	0	1	B3SW	×	×	B1C[4:0]				
									0	0	0	0	0	0	0	0
0ah	0	0	0	0	1	0	1	0	×	×	×	R2C[4:0]				
									0	0	0	0	0	0	0	0
0bh	0	0	0	0	1	0	1	1	×	×	×	G2C[4:0]				
									0	0	0	0	0	0	0	0
0ch	0	0	0	0	1	1	0	0	×	×	×	B2C[4:0]				
									0	0	0	0	0	0	0	0
0dh	0	0	0	0	1	1	0	1	M6SP	×	×	M6SPC[4:0]				
									0	0	0	0	0	0	0	0
0eh	0	0	0	0	1	1	1	0	F3SP	×	×	F3SPC[4:0]				
									0	0	0	0	0	0	0	0
0fh	0	0	0	0	1	1	1	1	F4SP	×	×	F4SPC[4:0]				
									0	0	0	0	0	0	0	0
10h	0	0	0	1	0	0	0	0	SYNC	×	FOUT1[2:0]			FIN1[2:0]		
									0	0	0	0	0	0	0	0
11h	0	0	0	1	0	0	0	1	×	GR1M2	GRON2	GR1M1	GRON1	AT1[2:0]		
									0	0	0	0	0	0	0	0
12h	0	0	0	1	0	0	1	0	×	×	R1Aoff[5:0]					
									0	0	0	0	0	0	0	0
13h	0	0	0	1	0	0	1	1	×	×	R1Aon[5:0]					
									0	0	0	0	0	0	0	0
14h	0	0	0	1	0	1	0	0	×	×	G1Aoff[5:0]					
									0	0	0	0	0	0	0	0
15h	0	0	0	1	0	1	0	1	×	×	G1Aon[5:0]					
									0	0	0	0	0	0	0	0
	Register address								data							

Continued on next page.

Continued from preceding page.

	Register address								data							
	A7	A6	A5	A4	A3	A2	A1	A0	D7	D6	D5	D4	D3	D2	D1	D0
16h	0	0	0	1	0	1	1	0	×	×	B1Aoff[5:0]					
									0	0	0	0	0	0	0	0
17h	0	0	0	1	0	1	1	1	×	×	B1Aon[5:0]					
									0	0	0	0	0	0	0	0
18h	0	0	0	1	1	0	0	0	×	×	FOUT2[2:0]			FIN2[2:0]		
									0	0	0	0	0	0	0	0
19h	0	0	0	1	1	0	0	1	×	×	×	×	×	AT2[2:0]		
									0	0	0	0	0	0	0	0
1ah	0	0	0	1	1	0	1	0	×	×	R2Aoff[5:0]					
									0	0	0	0	0	0	0	0
1bh	0	0	0	1	1	0	1	1	×	×	R2Aon[5:0]					
									0	0	0	0	0	0	0	0
1ch	0	0	0	1	1	1	0	0	×	×	G2Aoff[5:0]					
									0	0	0	0	0	0	0	0
1dh	0	0	0	1	1	1	0	1	×	×	G2Aon[5:0]					
									0	0	0	0	0	0	0	0
1eh	0	0	0	1	1	1	1	0	×	×	B2Aoff[5:0]					
									0	0	0	0	0	0	0	0
1fh	0	0	0	1	1	1	1	1	×	×	B2Aon[5:0]					
									0	0	0	0	0	0	0	0
20h	0	0	1	0	0	0	0	0	INTCR	×	×	×	INTM4	INTM3	INTM2	INTM1
									0	0	0	0	0	0	0	0
	Register address								Data							

- SANYO Semiconductor Co.,Ltd. assumes no responsibility for equipment failures that result from using products at values that exceed, even momentarily, rated values (such as maximum ratings, operating condition ranges, or other parameters) listed in products specifications of any and all SANYO Semiconductor Co.,Ltd. products described or contained herein.
- SANYO Semiconductor Co.,Ltd. strives to supply high-quality high-reliability products, however, any and all semiconductor products fail or malfunction with some probability. It is possible that these probabilistic failures or malfunction could give rise to accidents or events that could endanger human lives, trouble that could give rise to smoke or fire, or accidents that could cause damage to other property. When designing equipment, adopt safety measures so that these kinds of accidents or events cannot occur. Such measures include but are not limited to protective circuits and error prevention circuits for safe design, redundant design, and structural design.
- In the event that any or all SANYO Semiconductor Co.,Ltd. products described or contained herein are controlled under any of applicable local export control laws and regulations, such products may require the export license from the authorities concerned in accordance with the above law.
- No part of this publication may be reproduced or transmitted in any form or by any means, electronic or mechanical, including photocopying and recording, or any information storage or retrieval system, or otherwise, without the prior written consent of SANYO Semiconductor Co.,Ltd.
- Any and all information described or contained herein are subject to change without notice due to product/technology improvement, etc. When designing equipment, refer to the "Delivery Specification" for the SANYO Semiconductor Co.,Ltd. product that you intend to use.
- Information (including circuit diagrams and circuit parameters) herein is for example only; it is not guaranteed for volume production.
- Upon using the technical information or products described herein, neither warranty nor license shall be granted with regard to intellectual property rights or any other rights of SANYO Semiconductor Co.,Ltd. or any third party. SANYO Semiconductor Co.,Ltd. shall not be liable for any claim or suits with regard to a third party's intellctual property rights which has resulted from the use of the technical information and products mentioned above.

This catalog provides information as of August, 2011. Specifications and information herein are subject to change without notice.