RED INDICATES ORIGINAL

DATA CONTAINED IN THIS DOCUMENT IS PROPRIETARY TO TROMPETER ELECTRONICS INC. AND SHALL NOT BE DISCLOSED, COPIED OR USED FOR PROCUREMENT OR MANUFACTURE WITHOUT EXPRESS WRITTEN PERMISSION.

REVISIONS				305-1438	SH 1
REV	ECO	DESCRIPTION	DWN	APPROVED	DATE
A		PRODUCTION RELEASE	R L		

TABLE 1	
DASH NO	DESCRIPTION
-1	TERM (NO CHAIN)
-2	TERM WITH 2.5 BRASS CHAIN
-3	TERM WITH 2.5 NYLON CHAIN
-4	TERM WITH 3.0 BRASS CHAIN
-5	TERM WITH 3.0 NYLON CHAIN
-6	TERM WITH 6.0 BRASS CHAIN
-7	TERM WITH 6.0 NYLON CHAIN
-8	TERM WITH 4.0 BRASS CHAIN
-9	TERM WITH 4.0 NYLON CHAIN
-10	TERM WITH 10.0 BRASS CHAIN
-11	TERM WITH 10.0 NYLON CHAIN
-12	TERM WITH 2.5 SST ROPE 6
-13	TERM WITH 3.0 SST ROPE 6
-14	TERM WITH 6.0 SST ROPE 6
-15	TERM WITH 4.0 SST ROPE 6
-16	TERM WITH 7.5 SST ROPE 6
-17	TERM WITH 4.5 SST ROPE 6

TABLE 2				
DASH NO	"A" DIA	"B" DIA	"C" DIM	"D" DIM
-D2	.630	.750	1.066	.450
-D3	.505	.625	.941	.388
-D4	.439	.562	.878	.355
-D5	.380	.500	.816	.325
-D6	.317	.437	.753	.295
-D7	.281	.406	.722	.278
-D8	.610	.750	1.066	.450
-D9	.567	.687	1.003	.419
-DD8	.330	.450	.766	.300

INCH	MM	INCH	MM	INCH	MM	INCH	MM	INCH	MM	INCH	MM
.005	0.13	.290	7.37	.406	10.31	.567	14.40	.878	22.30	7.0	177.80
.010	0.25	.295	7.49	.419	10.64	.610	15.49	.941	23.90	10.0	254.00
.030	0.76	.300	7.62	.437	11.10	.625	15.88	1.003	25.48		
.032	0.81	.317	8.05	.439	11.15	.630	16.00	1.066	27.08		
.062	1.57	.325	8.26	.450	11.43	.687	17.45	1.261	32.03		
.140	3.56	.330	8.38	.460	11.68	.722	18.34	2.5	63.50		
.200	5.08	.355	9.02	.500	12.70	.750	19.05	3.0	76.20		
.25	6.35	.375	9.53	.505	12.83	.753	19.13	4.0	101.60		
.278	7.06	.380	9.65	.56	14.22	.766	19.46	4.5	114.30		
.281	7.14	.388	9.86	.562	14.27	.816	20.73	6.0	152.40		

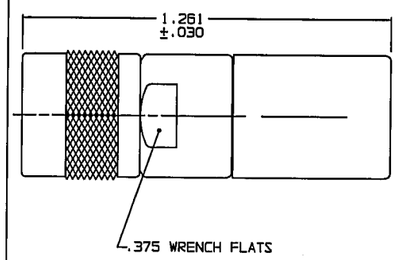

-1- 3 SHOWN

NO CHAIN STAINLESS STEEL ROPE OR MOUNTING LUG

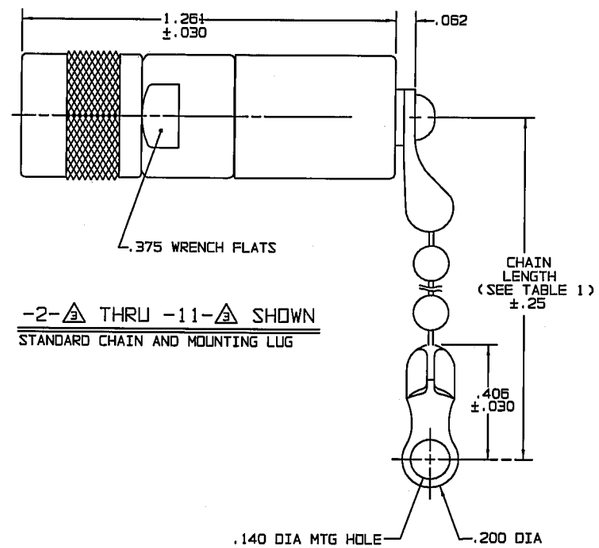

-2- 3 THRU -11- 3 SHOWN

STANDARD CHAIN AND MOUNTING LUG

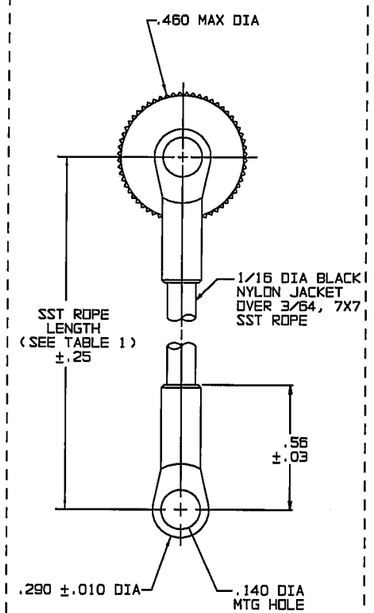

-12- 3 THRU

-17- 3 SHOWN

STAINLESS STEEL ROPE AND MOUNTING LUG

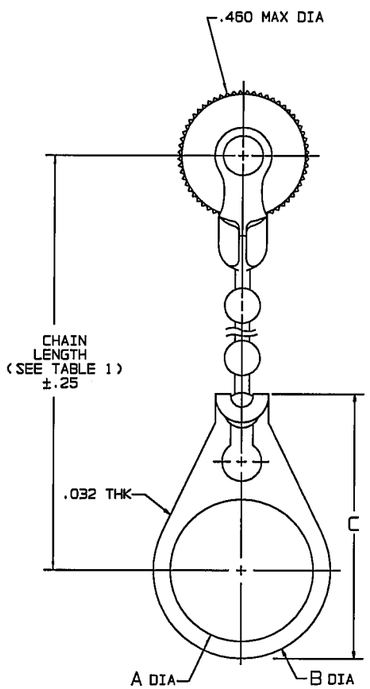

-2- 3 -D2 THRU

-11- 3 -DD8 SHOWN

STANDARD CHAIN AND BULKHEAD JACK MOUNTING LUG

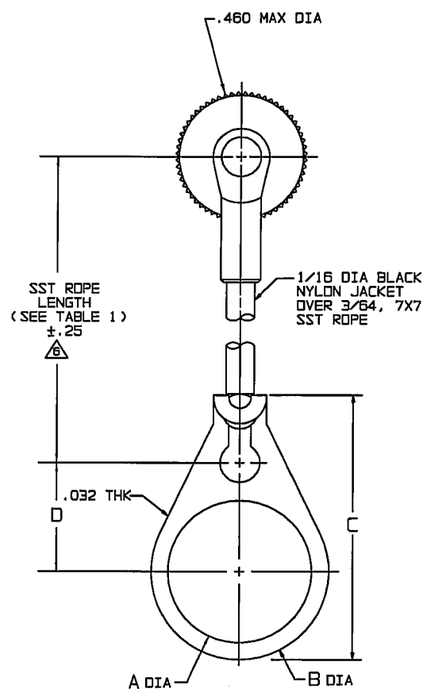

-12- 3 -D2 THRU

-17- 3 -DD8 SHOWN

STAINLESS STEEL ROPE AND BULKHEAD JACK MOUNTING LUG

6 NOTE THAT LENGTH FOR SST ROPE WITH MOUNTING LUG OPTION IS NOT MEASURED TO CENTER OF BULKHEAD MOUNTING LUG

5. EXAMPLE OF COMPLETE MODEL NO:

305-1438-2- 3 -D2

- BASIC MODEL NO
- CHAIN MATL AND LENGTH (SEE TABLE 1)
- BULKHEAD JACK MOUNTING LUG (OPTIONAL), AVAILABLE WITH BRASS, NYLON CHAIN AND SST ROPE, (SEE TABLE 2)

4. PIN CONTACT TRS SERIES CONCENTRIC TWINAX/ TRIAX 3 LUG SUBMINIATURE TERMINATED CABLE PLUG

3 RESISTANCE VALUE IN OHMS (1/2, 1%)

2. FINISH: TFS-1A (NICKEL)

1. ALL DIM ARE IN INCHES

SCHEMATICS

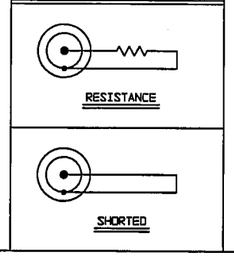

QTY	DESCRIPTION		PART NUMBER	ITEM
TOL UNLESS SPECIFIED .XX ±.005 .XXX ±.XXXX ANGLES±	TROMPETER ELECTRONICS, INC.		TNGM1 SPECIAL WITH 1/2 WATT RES.	
DWN R L 11/17/99	MATERIAL	CODE IDENT	DRAWING NO.	REV
CHK 11/17/99	—	14949	305-1438	A
ENGR —				
NEXT ASSY APPR 11/17/99	SCALE 4/1	DATE 11/18/99	SHEET 1C	