SNAP IN FIT

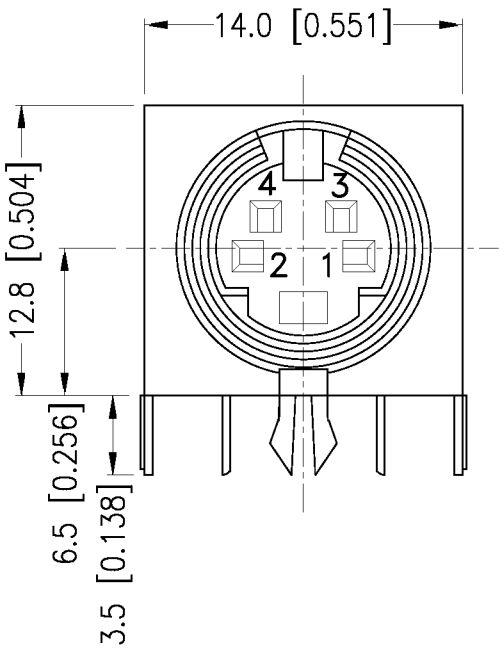

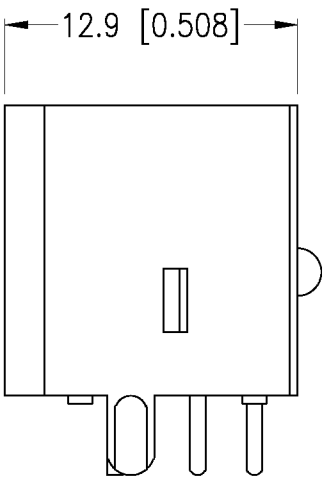

SPECIFICATIONS:

RATING: 100V AC 1A MAX OR
12V DC 2A MAX

INSULATION RESISTANCE:
50 MOHM MIN AT 250V DC

DIELECTRIC STRENGTH:
250V AC, 1 MINUTE

CONTACT RESISTANCE:
30 mOHM MAX

INSERTION FORCE:
4.5KG MAX

WITHDRAWAL FORCE:
0.9KG~3KG

FOOTPRINT (BOTTOM VIEW)

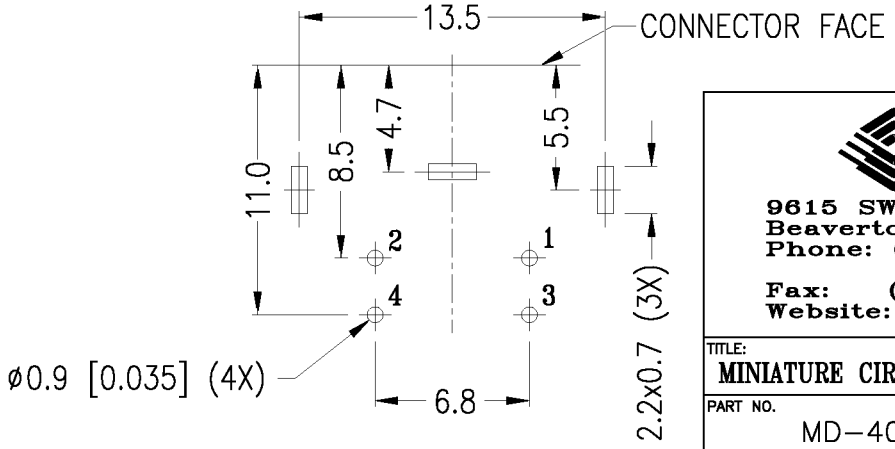

CUI STACK
9615 SW Allen, Suite 103
Beaverton, OR 97005
Phone: (503) 643-4899
800-275-4899
Fax: (503) 643-6129
Website: www.cuistack.com

TITLE: MINIATURE CIRCULAR CONNECTOR WITH SHIELD		
PART NO. MD-40SMS	UNITS: MM [INCHES]	
DRAWN BY:	APPROVED BY:	SCALE: 3X

PC FILE NAME: MD-40SMS.DWG

COPYRIGHT 1997 BY CUI STACK, INC.