OPTEK

Fiber Optic High Speed PIN Photodiode in SMA Receptacle Type OPF481

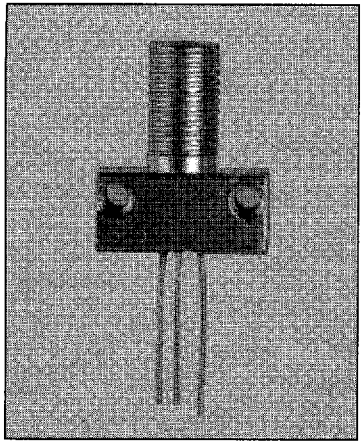

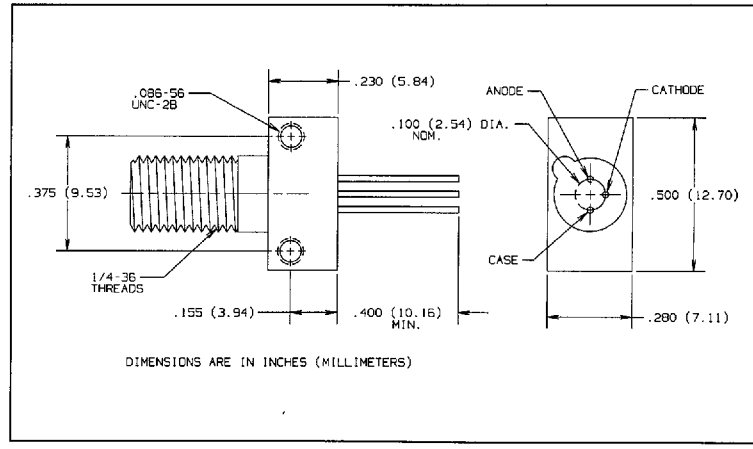

Features

- Component pre-mounted and ready to use
- High speed, low capacitance
- Pre-tested with fiber to assure performance
- Popular SMA style receptacle
- Electrically isolated from case

Description

The OPF481 consists of a low cost plastic cap PIN photodiode pre-mounted and aligned in an SMA receptacle. This configuration is designed for PC board or panel mounting. Includes lock washer and jam nut, two 2-56 screws, and dust cap.

The PIN Photodiodes are designed to interface with multimode optical fibers from 50/125 to 100/140 microns.

Absolute Maximum Ratings ($T_A = 25^\circ$ C unless otherwise noted)

Reverse Voltage	100 VDC
Continuous Power Dissipation	200 mW(1)
Storage Temperature Range	-55° C to +100° C
Operating Temperature Range	-40° C to +85° C
Lead Soldering Temperature [1/16 inch (1.6 mm) from case for 5 sec. with soldering iron]	240° C(2)

Notes:
(1) Derate linearly @ 2.0 mW/° C above 25° C.
(2) RMA flux is recommended. Duration can be extended to 10 sec. max when flow soldering.
(3) Test @ $V_R = 5$ V with 50/125 micron, 0.20 N.A. fiber, @ 10 µW optical power @ 850 nm. Responsivity levels apply to 50 µm, 62.5 µm and 100 µm core optical fibers.

6798580 0002816 637

Optek Technology, Inc. 1215 W. Crosby Road Carrollton, Texas 75006 (972) 323-2200 Fax (972) 323-2396

Type OPF481

Electrical Characteristics ($T_A = 25^{\circ}$ C unless otherwise noted)

SYMBOL	PARAMETER	MIN	TYP	MAX	UNITS	TEST CONDITIONS
R	Flux Responsivity	0.45	0.55		A/W	$V_R = 5.0$ V(3)
I_D	Dark Current		0.1	5.0	nA	$V_R = 5.0$ V
λp	Peak Response Wavelength		860		nm	
t_r	Output Rise Time		0.6		ns	$V_R = 50$ V, $R_L = 50\ \Omega$, 10%-90%
t_r	Output Rise Time		1.0		ns	$V_R = 15$ V, $R_L = 50\ \Omega$, 10%-90%
t_r	Output Rise Time		2.0		ns	$V_R = 5.0$ V, $R_L = 50\ \Omega$, 10%-90%
C_T	Total Capacitance		1.5	2.0	pF	$V_R = 5.0$ V

Typical Performance Curves

DARK CURRENT vs. AMBIENT TEMPERATURE

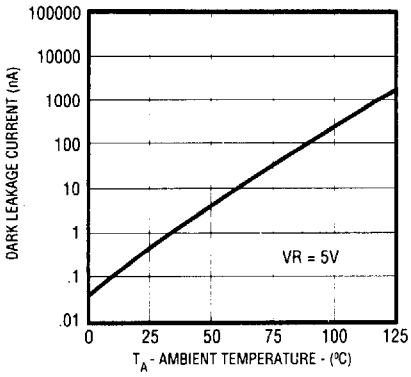

Relative Spectral Response

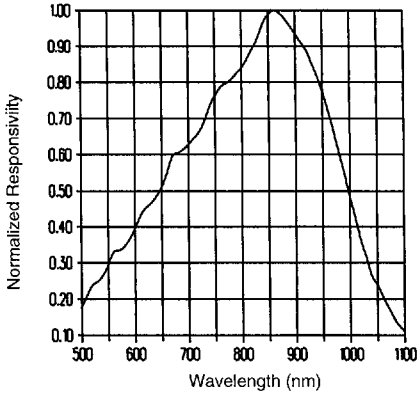

DARK CURRENT vs. REVERSE VOLTAGE

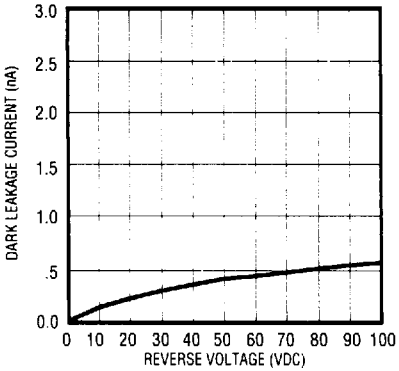

Typical Capacitance vs Reverse Voltage

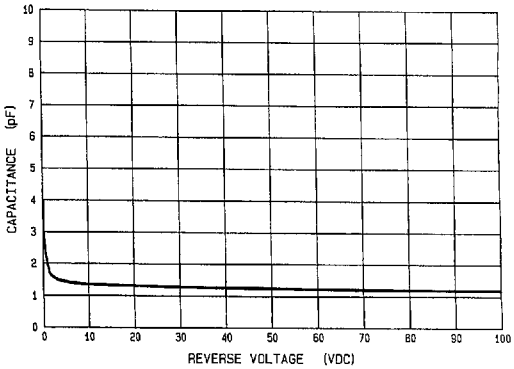

FIBER OPTIC COMPONENTS

6798580 0002817 573

Optek reserves the right to make changes at any time in order to improve design and to supply the best product possible.

Optek Technology, Inc. 1215 W. Crosby Road Carrollton, Texas 75006 (972)323-2200 Fax (972)323-2396