D

THIS DRAWING AND DESIGN HEREON CONSTITUTES A PROPRIETARY DESIGN OF PACKARD ELECTRIC DIVISION AND IS NOT TO BE DUPLICATED OR REPRODUCED WITHOUT AUTHORITY OF PACKARD ELECTRIC DIVISION.

PACKARD ELECTRIC DIVISION
GENERAL MOTORS CORPORATION
WARREN, OHIO

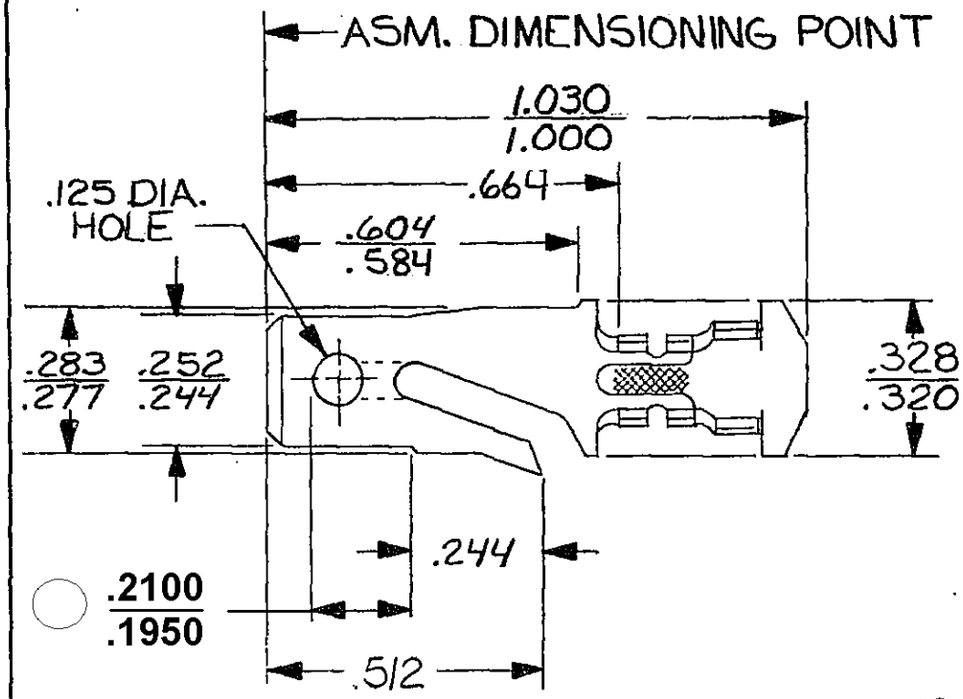

C02D2199

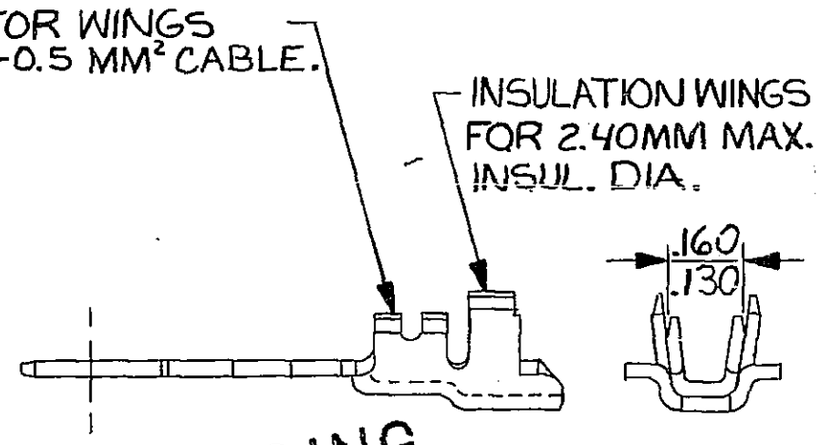

PATENT PENDING

THIRD ANGLE PROJECTION

PART NO 1204 0701

DATE	SYM	REVISION RECORD	AUTH	DR	CK
18AP83	A	RELEASED	83005	VS	[illegible]
01AU83	B	REV SYM ADVANCED	86126	MS	JM
23AP84	–	OBSOLETE	83003	SG	[illegible]
04MY93	–	REINSTATED	930010	GH	GH
05DE05	B5	ADDED DIM .2100/.1950			
		AND REMOVED DIM (1 PLC)	274727	CCV	JVM

P.N.C. CODE

CODE NO. 6900

QC

DWG. DATE 18AP83 SCALE NONE

EST NO

REFERENCE NO 2962864 "D" SIZE SHT "1"

TOLERANCE UNLESS OTHERWISE SPECIFIED
DECIMAL ONE PLACE ±.005 TWO PLACE
ANGULAR ±2°

DR. [illegible] 18AP83
CK. [illegible] DATE [illegible]
APPR. DATE
APPR. [illegible] DATE 23MY83

MATERIAL SPEC .0320 THK. SAE CA210 BRASS-TIN PLATED

NAME TERMINAL-MALE-"56" SERIES

PART NO 1204 0701 OUTLINE DRAWING

SIZE A

PACKARD ELECTRIC