P/N	"A" CABLE TYPE
−1CC	Ø .141 SEMI−RIGID CABLE
−1CCSF	Ø .141 SEMI−RIGID CABLE
−2CC	Ø .085 SEMI−RIGID CABLE
−2CCSF	Ø .085 SEMI−RIGID CABLE
−4CC	Ø .118 SEMI−RIGID CABLE
−4CCSF	Ø .118 SEMI−RIGID CABLE

REVISIONS				
ZONE	REV	DESCRIPTION	DATE	BY
−	A	ECO 22661	11.24.09	DKN

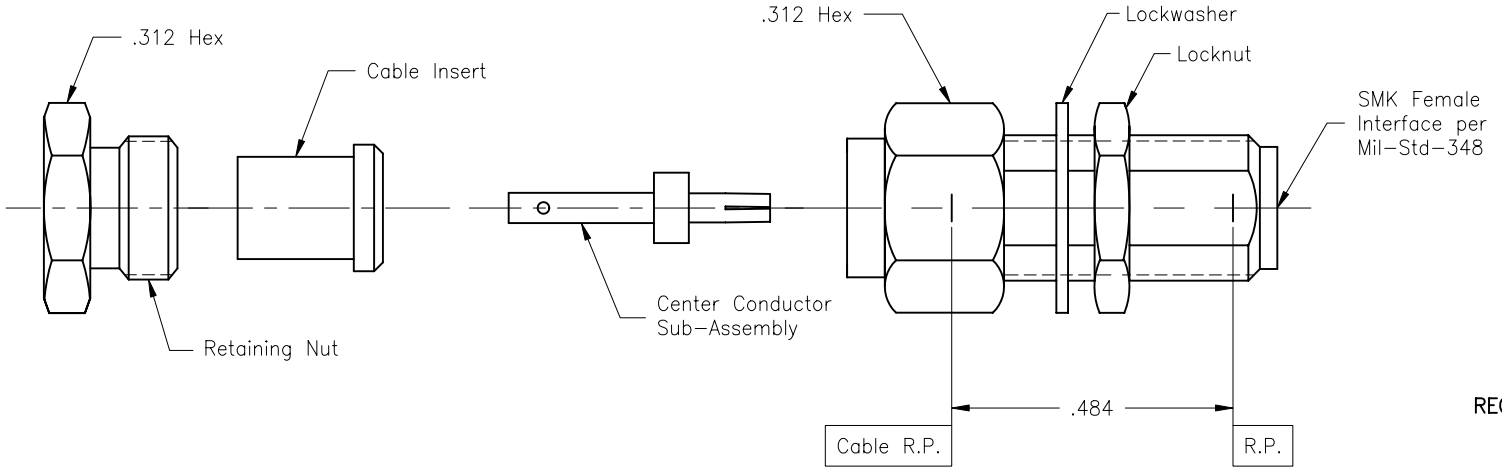

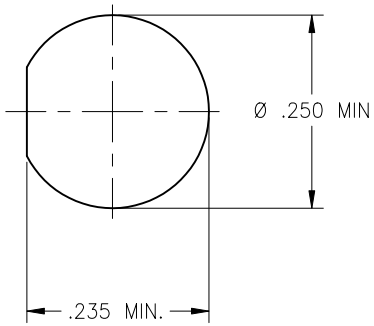

RECOMMENDED MOUNTING HOLE
SCALE: NONE

Note:
1. All components shall be packaged and shipped unassembled.

MATERIAL:

Body, Locknut And Retaining Nut:
303 sst per ASTM A−582.
Sleeve:
303 sst per ASTM A−582.
Center Conductor:
BeCu alloy per ASTM B−196.
Bead:
Polymethylpentene (PMP)
Lockwasher:
Stainless Steel 410

ELECTRICAL:

Impedance: 50 Ohms nominal.
Freqancy Range: DC to 40 GHz.
VSWR: 1.05 + .005 x f max to 40 GHz.
Insertion Loss: $.04\sqrt{f(GHz)}$ dB max.
Working Voltage: 500 Vrms max @ sea level.
Dielectric Withstanding Voltage: 1500 Vrms.
R.F. HiPot Voltage: 1000 Vrms min @ 5MHz.
Corona Level: 375 Vrms @ 70,000 ft.
Insulation Resistance: 5000 MegOhms min.
R.F. Leakage: −90 dB min from 2 ~ 3 GHz.
Contact Resistance:
Initial:
Center Contact: 3.0 Milliohm max.
Outer Contact: 2.0 Milliohm max.
After Environment:
Center Contact: 4.0 Milliohm max.
Outer Contact: NA.

MECHANICAL:

Mating Characteristics:
Interface per Mil−Std−348.
Force To Engage & Disengage:
Torque: 2 inch−pounds max.
Longitudinal Force: NA.
Connector Durability:
500 cycles min @ 12 cycles/minute max.
Permeability: Less than 2.0 mu.

ENVIRONMENTAL:

Operating Temperature: −55° to +165°.
Thermal Shock:
Mil−Std−202, Method 107, Test Cond. B,
except high temperature will be +150°C.
Moisture Resistance:
Mil−Std−202, Method 106, Insulation resistance
at least 200 MegOhms within 5 minutes after
removal from humidity.
Corrosion:
Mil−Std−202, Method 101, Test Cond. B.
Vibration:
Mil−Std−202, Method 204, Test Cond. D.
Shock:
Mil−Std−202, Method 213, Test Cond. I.

FINISH:

Body, Retaining Ring, Locknut & Lockwasher:
(for SF's): Passivate per ASTM A−697.
(for CC's): Gold plate per ASTM B−488 over nickel underplate per AMS−QQ−N−290.
Center Conductor & Sleeve:
Gold plate per ASTM B−488 over nickel underplate per AMS−QQ−N−290.

APPLICABLE CARLISLE IT DOCUMENTS

WORK STD	PROD INST	ASSY INST
NA	NA	AI−284

NOTICE
THIS DRAWING EMBODIES A CONFIDENTIAL PROPRIETARY DESIGN ORIGINATED BY CARLISLE INTERCONNECT TECHNOLOGIES AND ALL DESIGN, MANUFACTURING, REPRODUCTION, USE AND SALE RIGHTS REGARDING THE SAME ARE EXPRESSLY RESERVED. IT IS SUBMITTED UNDER A CONFIDENTIAL RELATIONSHIP FOR A SPECIFIED PURPOSE AND THE RECIPIENT AGREES BY ACCEPTING THIS DRAWING NOT TO SUPPLY OR DISCLOSE ANY INFORMATION REGARDING IT TO ANY UNAUTHORIZED PERSON TO INCORPORATE INOTHER PROJECTS ANY SPECIAL FEATURE PECULIAR TO THIS DESIGN. ALL PATENT RIGHTS HERETO ARE EXPRESSLY RESERVED BY CARLISLE INTERCONNECT TECHNOLOGIES, LONG BEACH, CA 90815

TOLERANCES AND NOTES EXCEPT AS NOTED
DIMENSIONS ARE IN INCHES.
LINEAR .XX ±.015 .XXX ±.005 ANGULAR ± 1/2°
FRACTION ± 1/32
1. MACHINE FINISH: 32 √ RMS
2. BREAK ALL SHARP EDGES .003 MAX.
3. MACHINED FILLETS .005 MAX.
4. MACHINED SURFACES SQUARE TO RESPECTIVE AXIS WITHIN .005 INCHES PER INCH.
5. MACHINED DIAMETERS CONCENTRIC WITHIN .002 T.I.R.
6. DIMENSIONS TO BE MET BEFORE PLATING.
7. CHAMFER ALL THREADS 45°.
8. THREADS PER H−28
9. REMOVE FRAYED EDGES ON TEFLON.
10. REMOVE ALL BURRS.

MATERIAL		SIZE	SPECIFICATION	PROCUREMENT
−		−	−	−

APPROVAL INITIALS		DATE
DRAWN BY	RC	3.13.02
CHECKED BY		
TEST ENGG		
QUALITY		
DESIGN ENGG	DNg	11.24.09
MFG ENGG		

CARLISLE Interconnect Technologies
Long Beach, CA 90815

TITLE SMK FEMALE STRAIGHT BULKHEAD TO SEMI−RIGID CABLE

SCALE 10:1 | SUB−DIRECTORY\FILENAME _OL\ | SHEET 1 OF 1

SIZE C | CAGE CODE 30990 | DRAWING NO. 200 | REV. A

ENG−DWG REV. C