JYEBAO www.jyebao.com.tw

SMA862NS-0044	**SMA Jack For Panel Receptacle 50Ω**

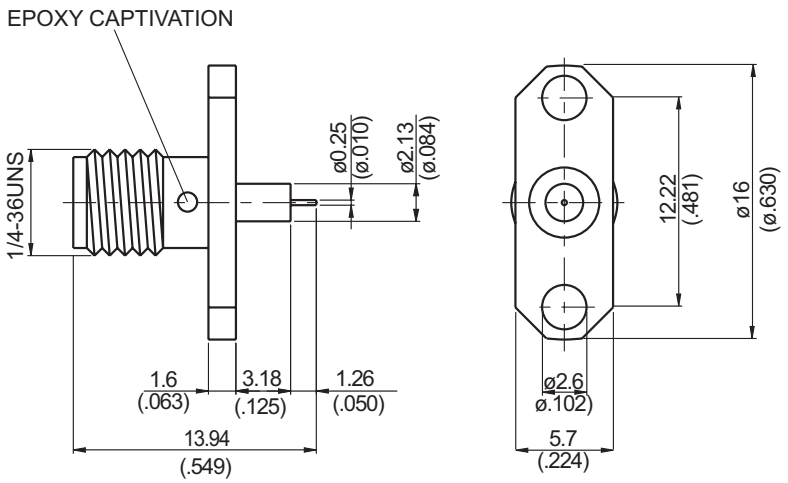

MOUNTING HOLE :

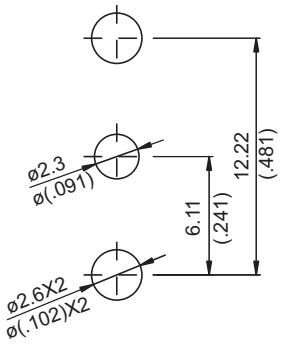

Parts	Material	Plating (Micro-inch)
Contact Pin	Beryllium Copper	Gold 20 Over Nickel 50 Over Copper 50
Insulator	Teflon	
Body	Stainless	Passivated

Weight: 1.64 g

Notice: JYEBAO reserves the right to make modifications deemed appropriate.