DATA CONTAINED IN THIS DOCUMENT IS PROPRIETARY TO TROMPETER ELECTRONICS INC AND SHALL NOT BE DISCLOSED, COPIED OR USED FOR PROCUREMENT OR MANUFACTURE WITHOUT EXPRESS WRITTEN PERMISSION OF TROMPETER ELECTRONICS INC

REVISIONS		12-20	SH 1
REV	DESCRIPTION	DATE	APPROVED
R	REVISED PER ECO 14973	3/11/03	WSZ

P2 CONN TYPE	FIG NO	P1 CONN TYPE																																	
		BJ20						UBJ20						BJ40						UBJ40						BJ120					
		SCHEMATICS																													
		E1	E2	E3	E4	E5	E7	E1	E2	E3	E4	E5	E7	E1	E2	E3	E4	E5	E7	E1	E2	E3	E4	E5	E7	E1	E2	E3	E4	E5	E7
		DASH NUMBERS																													
PL73	1A/B	-1	-2	-3	-4	-5	-121	-6	-7	-8	-9	-10	-127	-11	-12	-13	-14	-15	-133	-16	-17	-18	-19	-20	-139						
PL74	2A	-21	-22	-23	-24	-25	-122	-26	-27	-28	-29	-30	-128	-31	-32	-33	-34	-35	-134	-36	-37	-38	-39	-40	-140						
6 PL75	4	-41	-42	-43	-44	-45	-123	-46	-47	-48	-49	-50	-129	-51	-52	-53	-54	-55	-135	-56	-57	-58	-59	-60	-141	-225	-226	-227	-228	-229	-230
PL75FL	2A	-61	-62	-63	-64	-65	-124	-66	-67	-68	-69	-70	-130	-71	-72	-73	-74	-75	-136	-76	-77	-78	-79	-80	-142						
PL375	2B	-81	-82	-83	-84	-85	-125	-86	-87	-88	-89	-90	-131	-91	-92	-93	-94	-95	-137	-96	-97	-98	-99	-100	-143						
PL71	3	-101	-102	-103	-104	-105	-126	-106	-107	-108	-109	-110	-132	-111	-112	-113	-114	-115	-138	-116	-117	-118	-119	-120	-144						
PL74RG	2A	-221		-193				-222		-194				-223		-195				-224		-196									
6 PL75RG	4	-197	-198	-199	-200	-201	-202	-203	-204	-205	-206	-207	-208	-209	-210	-211	-212	-213	-214	-215	-216	-217	-218	-219	-220						

TABLE 1 6

POLARIZATION CHART

KEY LETTER	A°	B°	C°	COLOR BAND
NONE	120°	120°	120°	NONE
S	135°	135°	90°	WHITE
T	100°	150°	110°	RED
U	120°	130°	110°	ORANGE
V	115°	130°	115°	YELLOW
W	125°	110°	125°	GREEN
X	130°	100°	130°	BLUE
Y	110°	140°	110°	VIOLET
Z	100°	160°	100°	GRAY

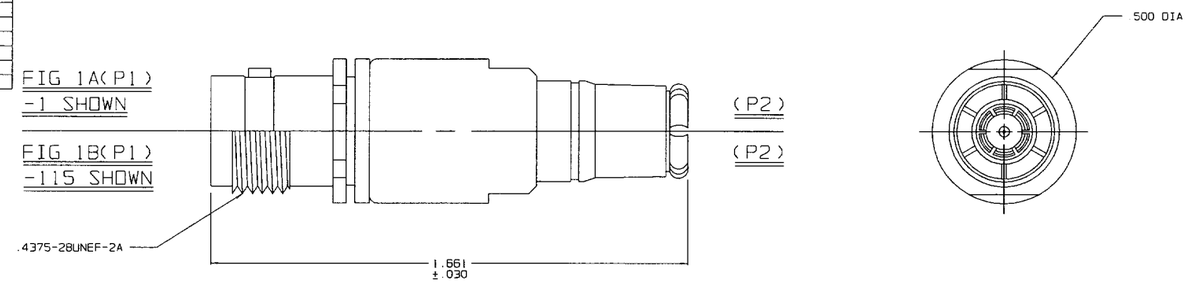

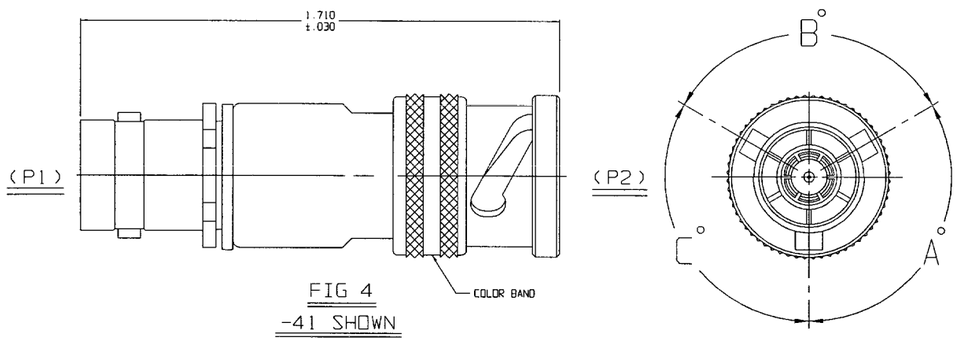

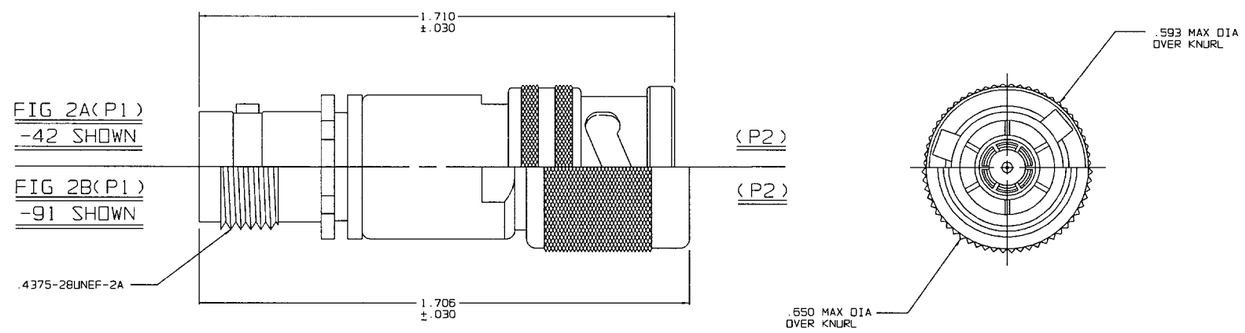

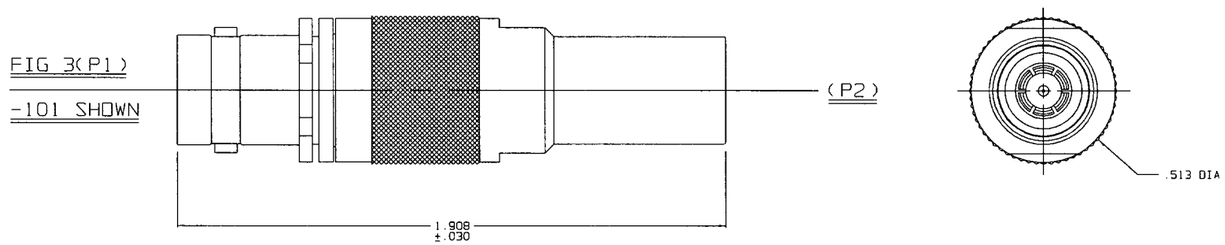

6 SEE TABLE 1 FOR POLARIZATION LETTER CODE

5. EXAMPLE OF COMPLETE MODEL NO:

AD - U BJ20 - E1 - PL75 RG X

- AD: ADAPTER
- U: U=75 OHMS
- BJ20: (P1) CONN TYPE
- E1: SCHEMATIC
- PL75: (P2) CONN TYPE
- RG: REVERSE GENDER; OMIT FOR NORMAL GENDER
- X: PORALIZATION LETTER CODE; OMIT FOR NONE 6

4. EXAMPLE OF COMPLETE PART NO:

12-20-1X

- 12-20: BASIC PART NO
- 1: DASH NO
- X: PORALIZATION LETTER CODE; OMIT FOR NORMAL GENDER 6

3. BETWEEN SERIES ADAPTER, 50 & 75 OHM BNC / TNC SERIES JACK TO "70" SERIES PLUG

2. FINISH: TFS-1A (NICKEL)

1. ALL DIM ARE IN INCHES

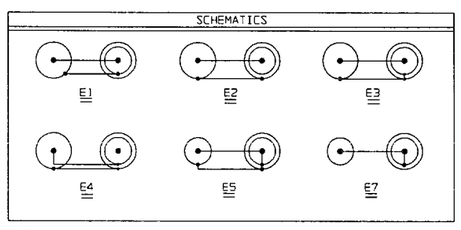

RED INDICATES ORIGINAL

INTERPRET DRAWING PER MIL-STD-100 DIMENSIONS ARE IN INCHES AND INCLUDE FINISH THICKNESS UNLESS OTHERWISE SPECIFIED		TOL: UNLESS SPECIFIED .XX .XXX ± .005 .XXXX ANGLES	TROMPETER ELECTRONICS, INC
DRAWN AAH	DATE 3-10-03	MATERIAL:	TITLE: ADAPTER; FEMALE BNC/ TNC SERIES TO MALE "70" SERIES
CHECKED DD	3-10-03		
QUALITY	3/11/03	FINISH:	
MANUF	3/11/03		SIZE A / CAGE CODE 14949 / DRAWING NO. 12-20 / REV. R
APPROVED WS	3/10/03		
NEXT ASSY	CAD FILE NO. 12-20R	DO NOT SCALE DWG	SCALE 2/1 / DATE: 12/16/86 / SHEET 1C