REVISION C

DO NOT SCALE FROM THIS PRINT

DESIGNED & DIMENSIONED IN INCHES[MILLIMETERS]

PRF00-J-C-EE-085A-SD

SERIES
-00: SMP

GENDER
-J: JACK

TYPE
-C: CABLE

FINISH
-EE: 50µ" EXTRA HEAVY GOLD CENTER CONTACT, 50µ" EXTRA HEAVY GOLD OUTER CONTACT

CABLE TYPE
-085A: .085" SEMI-RIGID

ORIENTATION
-S: STRAIGHT

TERMINATION
-D: DIRECT SOLDER

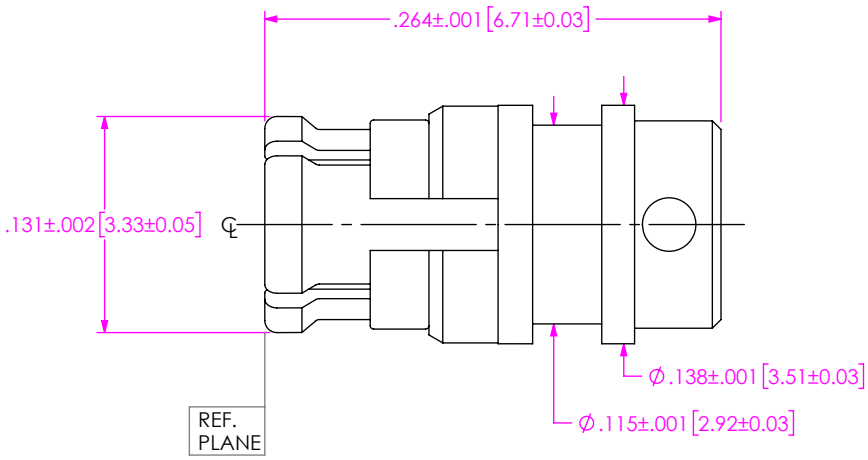

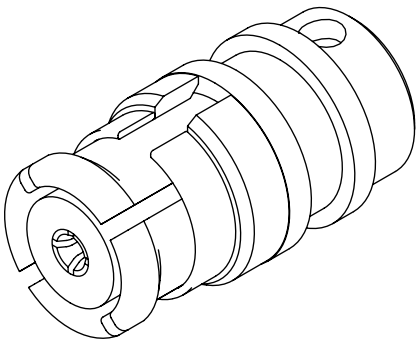

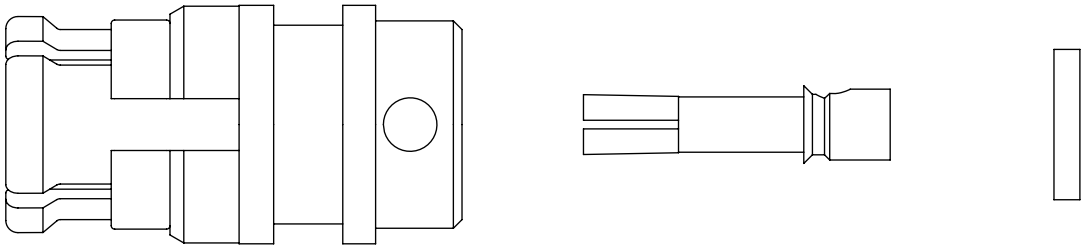

EXPLODED VIEW
NOT TO SCALE
(FOR CLARITY ONLY)

NOTES:

1. MATERIAL:
   CONTACT, BODY, ANTI-ROCK RING, EMI RING: BERYLLIUM COPPER
   INSULATOR, DIELECTRIC STOP: PTFE
2. FINISH:
   CONTACT, BODY, ANTI-ROCK RING, EMI RING: 50µ" MIN. GOLD OVER 50µ" MIN. NICKEL PLATE
3. PCI P/N: 3355.

F:\DWG\MISC\MKTG\PRF00-J-C-EE-085A-SD-MKT.SLDDRW

UNLESS OTHERWISE SPECIFIED, DIMENSIONS ARE IN INCHES.
TOLERANCES ARE:

DECIMALS	ANGLES
.XX: ±.01[0.3]	1 °
.XXX: ±.005[0.13]	
.XXXX: ±.0005[0.013]	

* PROPRIETARY NOTE *

THIS DOCUMENT CONTAINS CONFIDENTIAL AND PROPRIETARY INFORMATION AND ALL DESIGN, MANUFACTURING, REPRODUCTION, USE, PATENT RIGHTS AND SALES RIGHTS ARE EXPRESSLY RESERVED BY SAMTEC, INC. THIS DOCUMENT SHALL NOT BE DISCLOSED, IN WHOLE OR PART, TO ANY UNAUTHORIZED PERSON OR ENTITY NOR REPRODUCED, TRANSFERRED OR INCORPORATED IN ANY OTHER PROJECT IN ANY MANNER WITHOUT THE EXPRESS WRITTEN CONSENT OF SAMTEC, INC.

DO NOT SCALE DRAWING

SHEET SCALE: 6:1

samtec
520 PARK EAST BLVD, NEW ALBANY, IN 47150
PHONE: 812-944-6733 FAX: 812-948-5047
e-Mail info@SAMTEC.com code 55322

DESCRIPTION: SMP SOCKET FOR .085" LOW LOSS CABLE, .264 LG

DWG. NO. PRF00-J-C-EE-085A-SD

BY: EVE L 04/28/2019 SHEET 1 OF 2

REVISION C

CABLE APPLICATION VIEWS

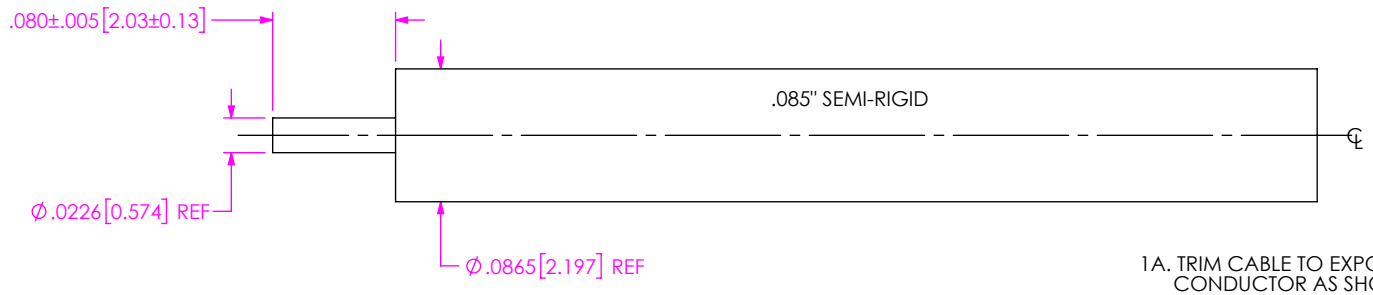

1A. TRIM CABLE TO EXPOSE CENTER CONDUCTOR AS SHOWN

IN-PROCESS VIEW 1

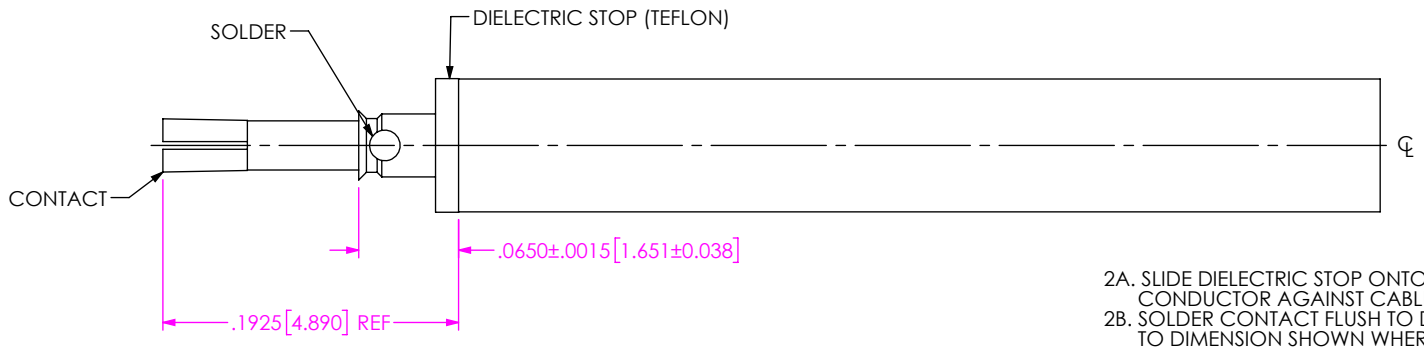

2A. SLIDE DIELECTRIC STOP ONTO CABLE CENTER CONDUCTOR AGAINST CABLE JACKET AS SHOWN.
2B. SOLDER CONTACT FLUSH TO DIELECTRIC STOP TO DIMENSION SHOWN WHERE INDICATED.

IN-PROCESS VIEW 2

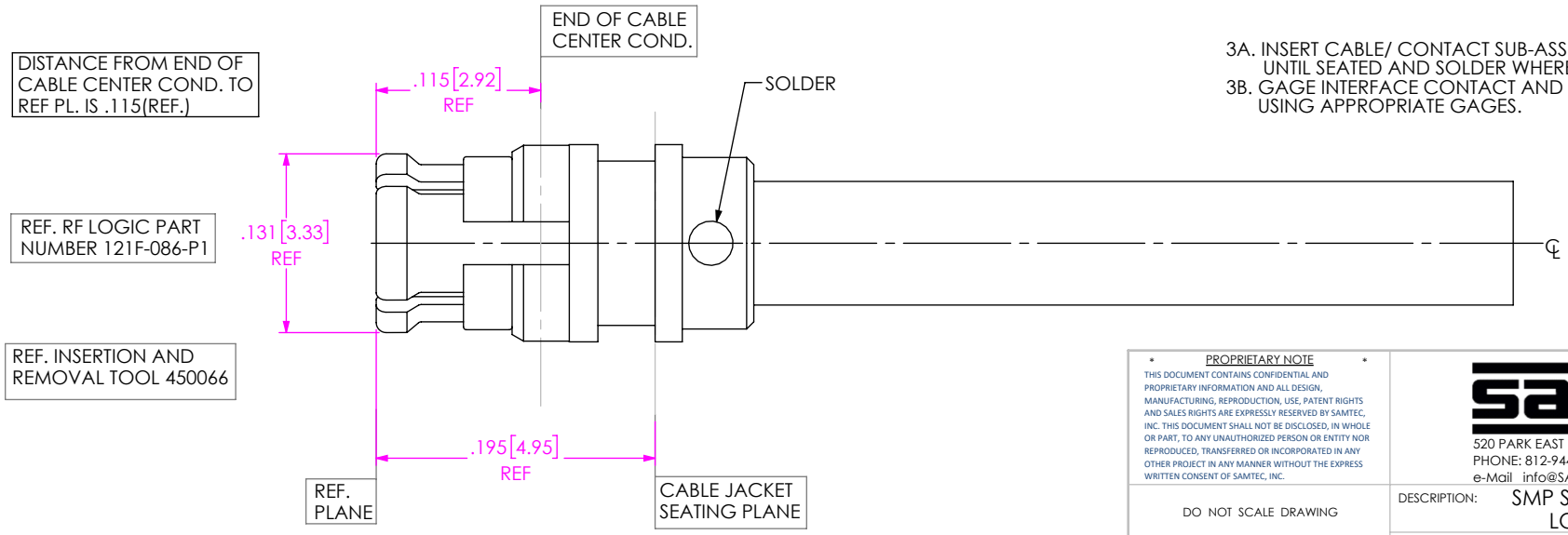

3A. INSERT CABLE/ CONTACT SUB-ASSEMBLY INTO CONNECTOR UNTIL SEATED AND SOLDER WHERE SHOWN.
3B. GAGE INTERFACE CONTACT AND INSULATOR RECESSION USING APPROPRIATE GAGES.

IN-PROCESS VIEW 3

PROPRIETARY NOTE

THIS DOCUMENT CONTAINS CONFIDENTIAL AND PROPRIETARY INFORMATION AND ALL DESIGN, MANUFACTURING, REPRODUCTION, USE, PATENT RIGHTS AND SALES RIGHTS ARE EXPRESSLY RESERVED BY SAMTEC, INC. THIS DOCUMENT SHALL NOT BE DISCLOSED, IN WHOLE OR PART, TO ANY UNAUTHORIZED PERSON OR ENTITY NOR REPRODUCED, TRANSFERRED OR INCORPORATED IN ANY OTHER PROJECT IN ANY MANNER WITHOUT THE EXPRESS WRITTEN CONSENT OF SAMTEC, INC.

DO NOT SCALE DRAWING

SHEET SCALE: 8:1

samtec
520 PARK EAST BLVD, NEW ALBANY, IN 47150
PHONE: 812-944-6733 FAX: 812-948-5047
e-Mail info@SAMTEC.com code 55322

DESCRIPTION: SMP SOCKET FOR .085" LOW LOSS CABLE, .264 LG

DWG. NO. PRF00-J-C-EE-085A-SD

BY: EVE L 04/28/2019 SHEET 2 OF 2

F:\DWG\MISC\MKTG\PRF00-J-C-EE-085A-SD-MKT.SLDDRW