REVISIONS		
ISS	ZONE	DESCRIPTION\PER REQUEST\DATE

1. CRIMPED CONTACT PIN
   SQ CRIMP SIZE 0.7mm
2. MAX. PANEL THICKNESS=2.4mm

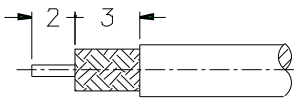

RECOMMENDED
CABLE STRIPPING DIM'S

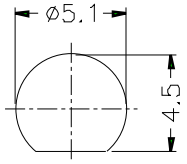

RECOMMENDED
MOUNTING HOLE

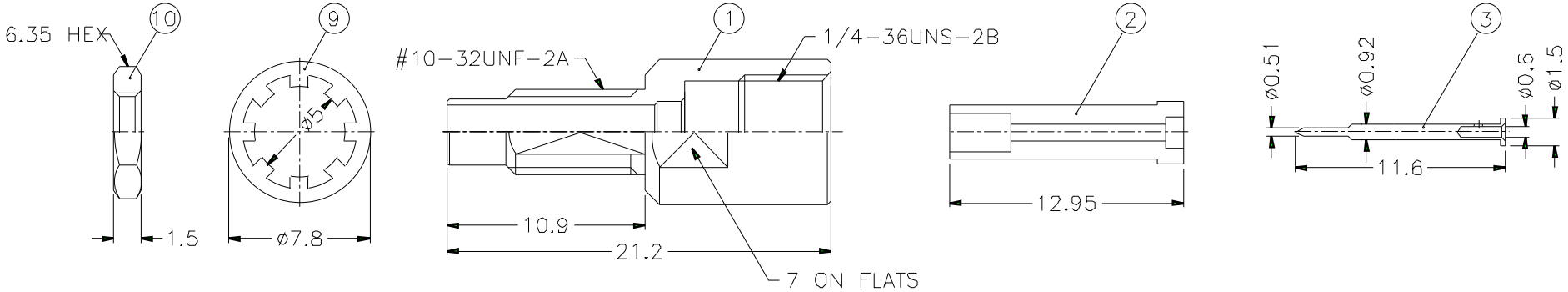

NOTES: FINISH (PLATING THICKNESS IN MICRO-INCHES)
1. BRASS PER QQ-B-626
2. BRASS PER QQ-B-613
3. NICKEL PL. 100 MIN. THICK OVER COPPER STRIKE
4. GOLD PL. 30 MIN. THICK OVER NICKEL PL. 100 MIN. THICK OVER COPPER STRIKE
5. TEFLON MIL-P-19468

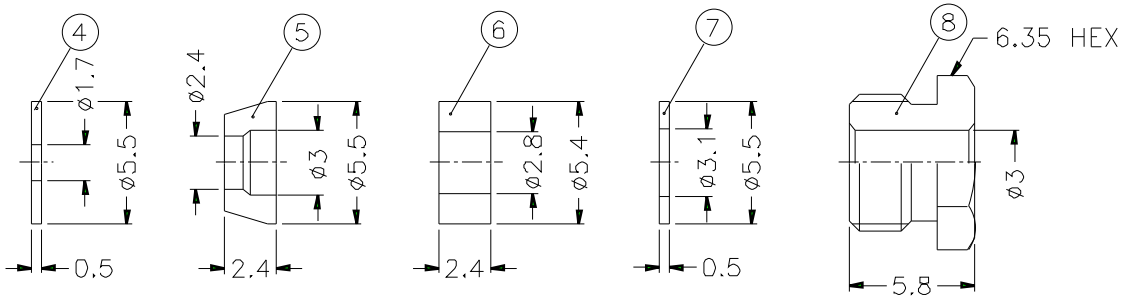

NO.	DESCRIPTION	MATERIAL	FINISH	Q'TY	DRAWING NO
10	HEX NUT	NOTE 1	NOTE 3	1	HN635-10-32X15
9	LOCK WASHER	NOTE 2	NOTE 3	1	LW-78/5X05
8	HEX NUT	NOTE 1	NOTE 3	1	SMA5200-11-635/3
7	WASHER	NOTE 2	NOTE 3	1	WS-55/31X05
6	GASKET	SILICONE	RED	1	GS-54/28X24
5	TOP HAT	NOTE 1	NOTE 3	1	SMA1141C1-8-3/24-B
4	WASHER	NOTE 2	NOTE 3	1	WS-55/17X05
3	CONTACT PIN	NOTE 1	NOTE 4	1	SMB7403-3-15/06-B
2	INSULATOR	NOTE 5	NATURAL	1	SMC1441C1-2T-50
1	BODY	NOTE 1	NOTE 3	1	SMC1441C1-1

DIMENSIONS ARE IN MILLIMETERS

UNLESS OTHERWISE SPECIFIED TOLERANCES
0.5-6 = ±0.2
6-30 = ±0.4
30-120 = ±0.6
120-315 = ±1
315-1000 = ±1.6
1000-2000 = ±2.4

SCALE 3/1 | ISSUE A

PART NO. SMC1441C1-NT30G-5-50

APPROVED | DATE 10-11-01'

CHECKED | DATE 10-11-01'

DRAWN | DATE 10-11-01'

FILE NO.

Amphenol

TITLE SMC BULKHEAD CLAMP JACK (FOR RG-174/U,188A/U,316/U)

DRAWING NO. KJ-SMC1441C1-NT30G-316U-50

ITEM NO.