SNAP IN FIT

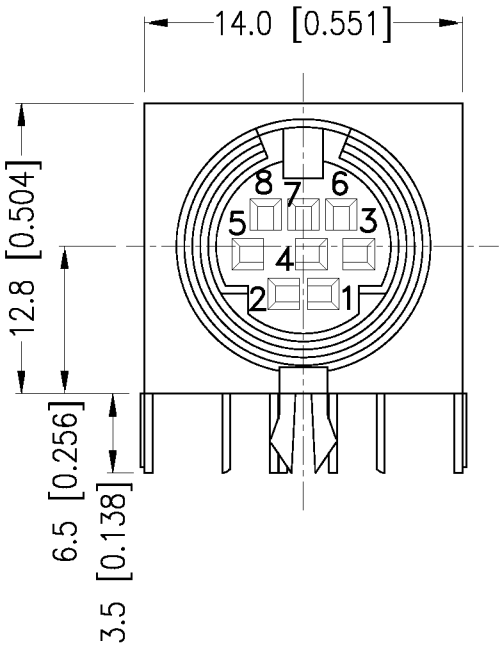

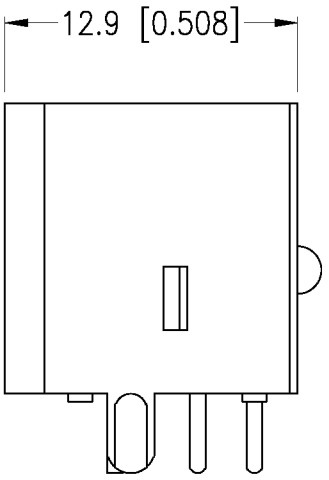

SPECIFICATIONS:
RATING: 100V AC 1A MAX OR
12V DC 2A MAX
INSULATION RESISTANCE:
50 MOHM MIN AT 250V DC
DIELECTRIC STRENGTH:
250V AC, 1 MINUTE
CONTACT RESISTANCE:
30 mOHM MAX
INSERTION FORCE:
4.5KG MAX
WITHDRAWAL FORCE:
0.9KG~3KG

FOOTPRINT (BOTTOM VIEW)

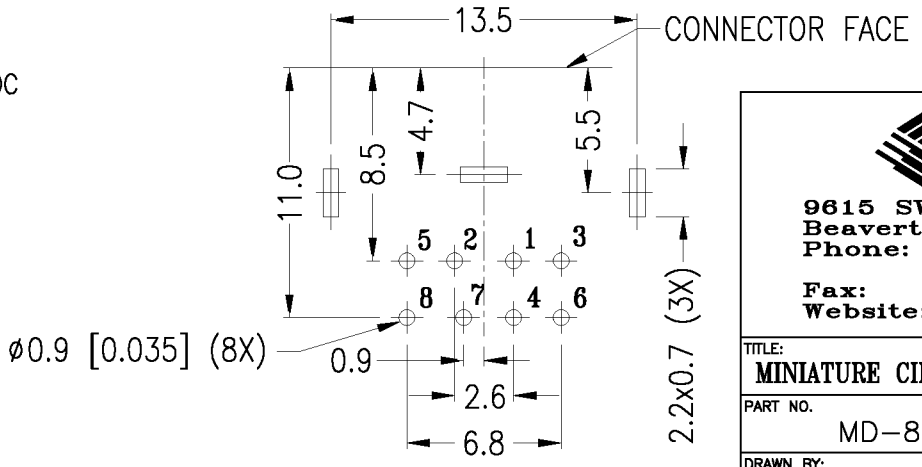

CUI STACK
9615 SW Allen, Suite 103
Beaverton, OR 97005
Phone: (503) 643-4899
800-275-4899
Fax: (503) 643-6129
Website: www.cuistack.com

TITLE: MINIATURE CIRCULAR CONNECTOR WITH SHIELD

PART NO.	UNITS:	
MD-80SMS	MM [INCHES]	
DRAWN BY:	APPROVED BY:	SCALE: 3X

PC FILE NAME: MD-80SMS.DWG

COPYRIGHT 1997 BY CUI STACK, INC.