THIS DRAWING IS UNPUBLISHED. RELEASED FOR PUBLICATION 20
© COPYRIGHT 20 BY TYCO ELECTRONICS CORPORATION. ALL RIGHTS RESERVED.

LOC	DIST
FT	0

REVISIONS

P	LTR	DESCRIPTION	DATE	DWN	APVD
	F	REVISED EC 0G3B-0402-02	20MAY2003	SW	CR
	G	REVISED ECO-05-002194	01AUG2005	SW	CR

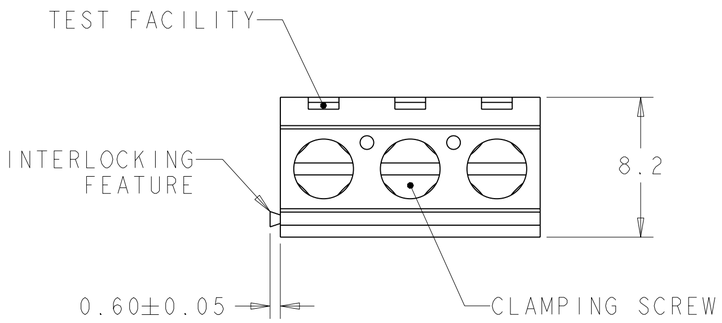

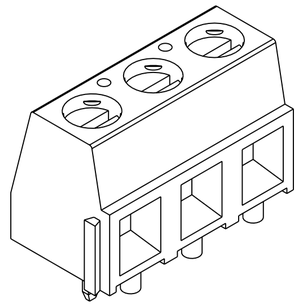

282837-3 AS SHOWN

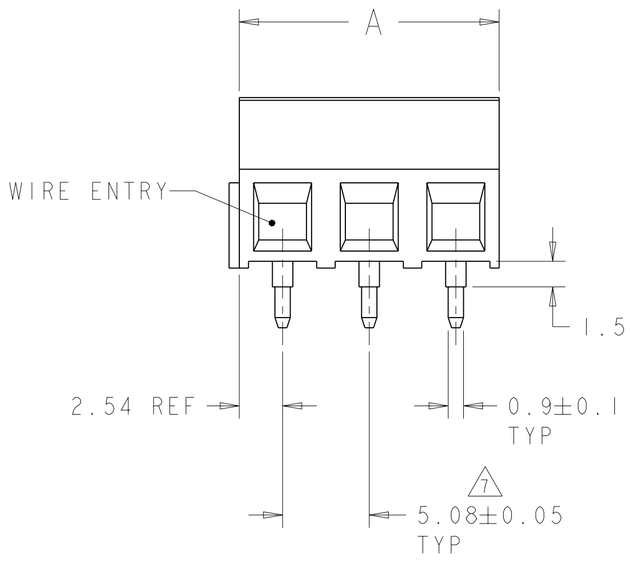

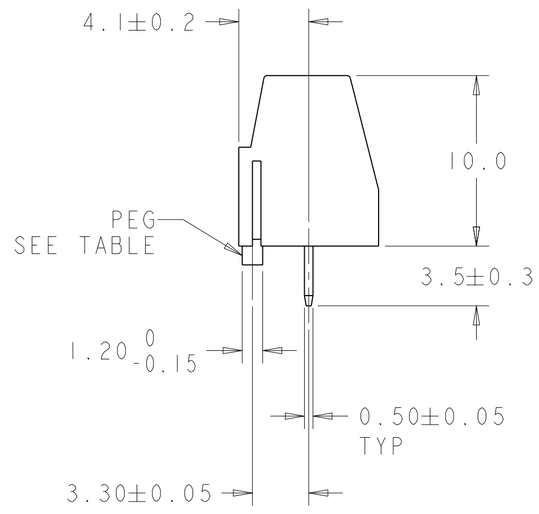

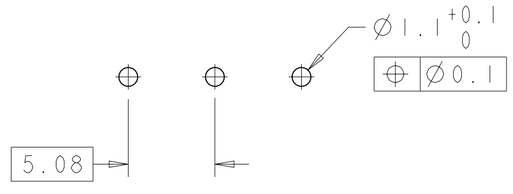

RECOMMENDED PC BOARD LAYOUT

	MARKING	PEG	A	NO OF POSN	PART NUMBER
	SEE DETAIL B	NO	45.72	9	3-282837-3
	SEE DETAIL A	NO	66.04	13	3-282837-2
	-	NO	127.00	25	2-282837-5
	-	NO	121.92	24	2-282837-4
	-	NO	116.84	23	2-282837-3
	-	NO	111.76	22	2-282837-2
	-	NO	106.68	21	2-282837-1
	-	NO	101.60	20	2-282837-0
	-	NO	96.52	19	1-282837-9
	-	NO	91.44	18	1-282837-8
	-	NO	86.36	17	1-282837-7
	-	NO	81.28	16	1-282837-6
	-	NO	76.20	15	1-282837-5
	-	NO	71.12	14	1-282837-4
	-	NO	66.04	13	1-282837-3
	-	NO	60.96	12	1-282837-2
	-	NO	55.88	11	1-282837-1
	-	NO	50.80	10	1-282837-0
	-	NO	45.72	9	282837-9
	-	NO	40.64	8	282837-8
	-	NO	35.56	7	282837-7
	-	NO	30.48	6	282837-6
	-	NO	25.40	5	282837-5
	-	NO	20.32	4	282837-4
	-	NO	15.24	3	282837-3
	-	NO	10.16	2	282837-2
PRELIMINARY		YES	10.16	2	282837-1

THIS DRAWING IS A CONTROLLED DOCUMENT FOR TYCO ELECTRONICS CORPORATION. IT IS SUBJECT TO CHANGE AND THE CONTROLLING ENGINEERING ORGANIZATION SHOULD BE CONTACTED FOR THE LATEST REVISION.

DIMENSIONS: mm

TOLERANCES UNLESS OTHERWISE SPECIFIED:
0 PLC ±-
1 PLC ±.3
2 PLC ±.25
3 PLC ±-
4 PLC ±-
ANGLES ±2

MATERIAL 1 -
FINISH 1 -

DWN S.WELDON 20MAY2003
CHK C.RICHARD 20MAY2003
APVD C.RICHARD 20MAY2003
PRODUCT SPEC 108-20166
APPLICATION SPEC 114-20079
WEIGHT -

BUCHANAN
Tyco Electronics
Harrisburg, PA 17105-3608

NAME TERMINAL BLOCK, PCB MOUNT SIDE ENTRY WIRE, STACKING W/INTERLOCK, 5.08mm PITCH

SIZE A2 | CAGE CODE 00779 | DRAWING NO C-282837 | RESTRICTED TO -

CUSTOMER DRAWING | SCALE 4:1 | SHEET 1 OF 2 | REV G

THIS DRAWING IS UNPUBLISHED. RELEASED FOR PUBLICATION 20
© COPYRIGHT 20 BY TYCO ELECTRONICS CORPORATION. ALL RIGHTS RESERVED.

LOC	DIST
FT	0

REVISIONS

P	LTR	DESCRIPTION	DATE	DWN	APVD
	-	SEE SHEET 1	-	-	-

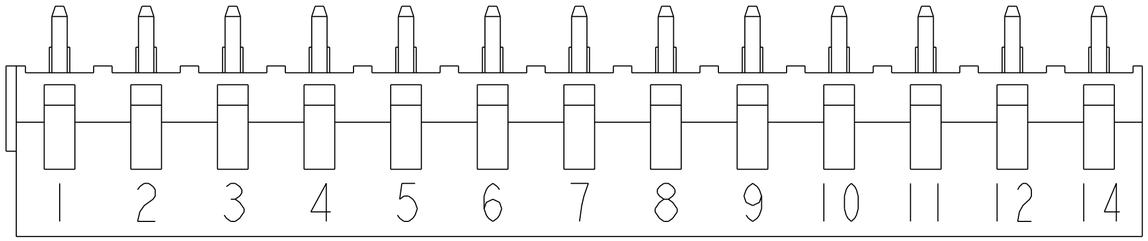

8
DETAIL A

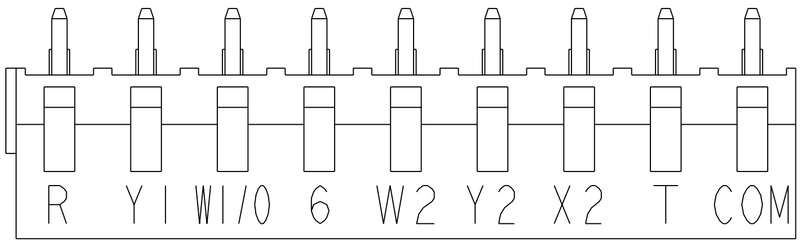

8
DETAIL B

1. MATERIALS AND FINISH
   HOUSING: PA 6-6, UL 94-V0, COLOR GREEN.
   CLAMP: BRASS, NICKEL PLATED.
   TERMINAL: BRASS, TIN PLATED.
   CLAMPING SCREW: M3, BRASS, NICKEL PLATED.
2. SUITABLE FOR 1,6-2,4mm PC BOARD THICKNESS.
3. END-TO-END STACKABLE W/INTERLOCK WITHOUT LOSS OF CENTERLINE SPACING.
4. WIRE SIZE RANGE: 15-17 AWG.
5. RECOGNIZED UNDER THE COMPONENT PROGRAM OF UNDERWRITERS LABORATORIES INC., FILE N° E60677.
6. IMQ CERTIFICATE WITH SURVEILLANCE IN CONFORMITY WITH IEC 998-1/998-2-1.
7. NOT CUMULATIVE TOLERANCE.
8. CHARACTERS INK MARKED BLACK.

THIS DRAWING IS A CONTROLLED DOCUMENT FOR TYCO ELECTRONICS CORPORATION IT IS SUBJECT TO CHANGE AND THE CONTROLLING ENGINEERING ORGANIZATION SHOULD BE CONTACTED FOR THE LATEST REVISION.

DIMENSIONS: mm

TOLERANCES UNLESS OTHERWISE SPECIFIED:
0 PLC ±-
1 PLC ±.3
2 PLC ±.25
3 PLC ±-
4 PLC ±-
ANGLES ±2

MATERIAL -
FINISH -

DWN S.WELDON 20MAY2003
CHK C.RICHARD 20MAY2003
APVD C.RICHARD 20MAY2003
PRODUCT SPEC -
APPLICATION SPEC -
WEIGHT -

BUCHANAN
Tyco Electronics
Harrisburg, PA 17105-3608

NAME
TERMINAL BLOCK, PCB MOUNT
SIDE ENTRY WIRE, STACKING
W/INTERLOCK, 5.08mm PITCH

SIZE	CAGE CODE	DRAWING NO	RESTRICTED TO
A2	00779	C-282837	-

CUSTOMER DRAWING | SCALE 4:1 | SHEET 2 OF 2 | REV G