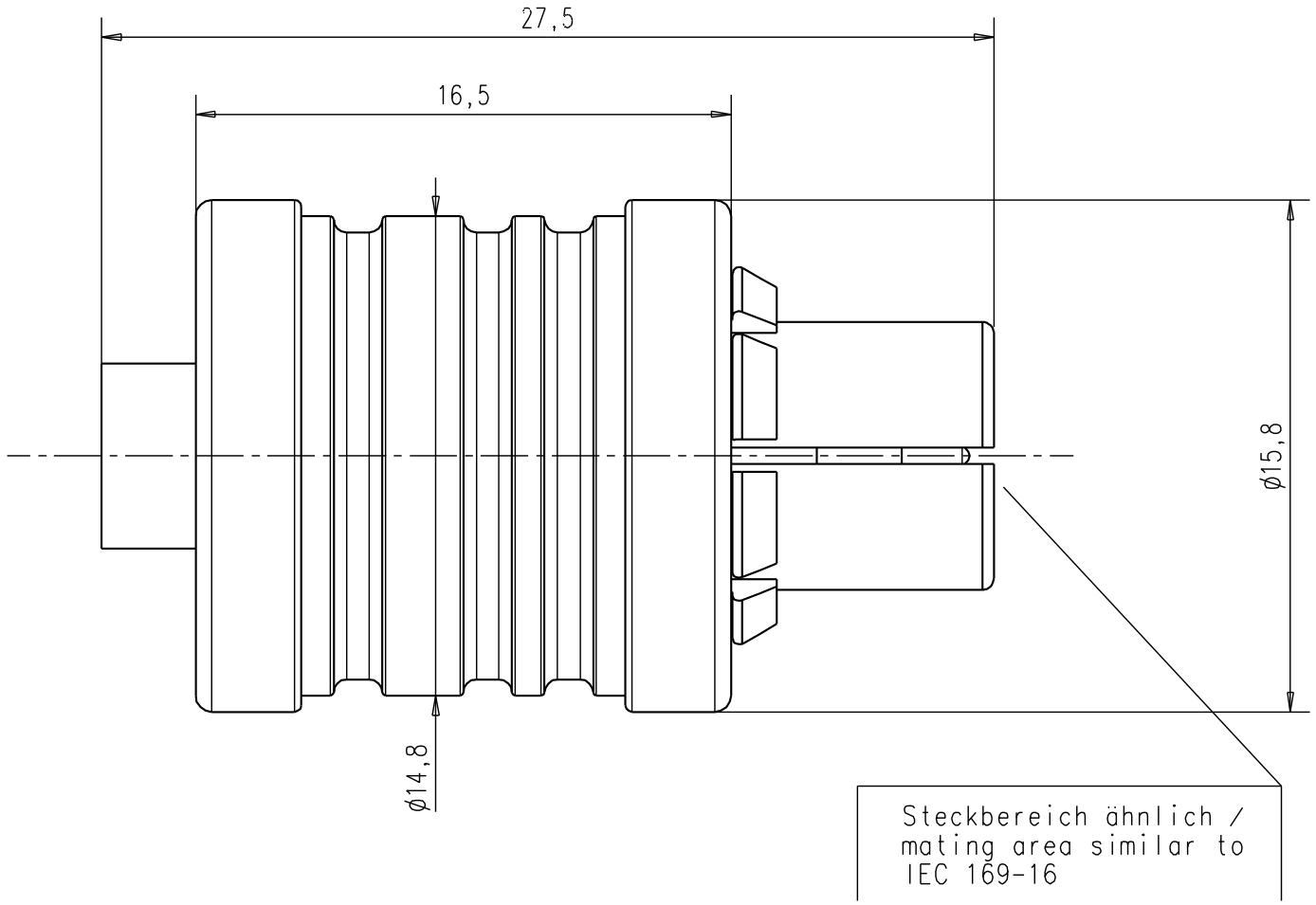

M/scale1:1

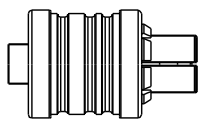

M/scale1:1

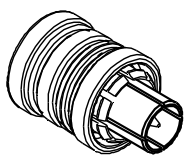

Kabelzuschnitt
Stripping dimension
Semi-Rigid

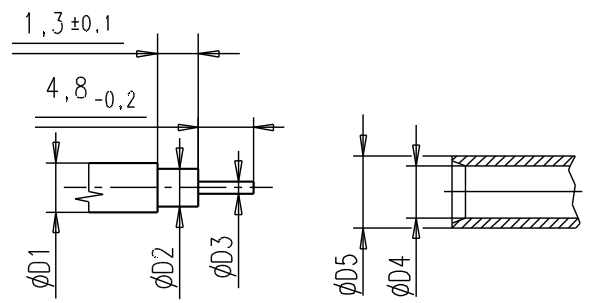

Für Kabel / For cable					Anschluss / connecting area	
Gr.	Typ / type	øD1	øD2	øD3	øD4	øD5
7	UT 141	3,58	3,00	0,91	3,80	5,70

IMS CONNECTOR SYSTEMS

general tolerance
ISO 2768
mH
angle: ±5°

scale: 5:1

Assembly instruction:
Stripping dimension: M-207

nr.	rev.	alteration	date	name
Design	b	Change tab. value	13.09.06	RSc
Design	a	Change acc. sim.	02.08.06	RSc

	date	name
generate	12.07.06	Schwaer
checked		
Norm		
47539		

Kabelstecker

Cable mount plug

4176.SN.1410.07'

Rev. b

yes no x
Schuettgut
0.00
0.00