Enabling the Electronics Revolution

PIHER sensing systems
an Amphenol® company

PST-360

Hall-Effect Through-Shaft Rotary Position Sensor

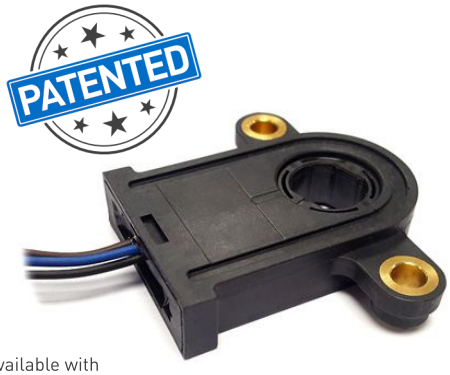

Available with CAN

CE

KEY FEATURES

Non-contacting

True, contactless operation
Without any gears or mechanical interfaces the sensor is easily assembled and calibrated and subject to limited wear and tear over lifetime.

Through Shaft Sensor

Through-hole design
Allows shaft insertion from top or bottom, simple assembly and makes it even more suitable in applications where space is limited.

360° Endless Rotation

360 degree absolute position feedback
Endless mechanical rotational angle without dead band, keeps the position on power loss with programmable electrical angles from 15 to 360 degrees.

Made for harsh environments
The rugged package protects the sensor from dust, moisture, vibration and extreme temperatures for usage in the most demanding environments.

50 million Long life

Durable and robust design
The non-contacting design allows for an extra-long product lifetime of up to 50 million cycles.

Fully customizable

Adaptable to your requirements
Programmable transfer function and switch outputs as well as different output protocols and redundancy levels available.

DESCRIPTION

The PST-360 position sensor combines a through-shaft design with accurate absolute position feedback and a true non-contacting sensing element that does not rely on gears or other rotating parts.

This innovative and unique patented design complements the attributes of the target application and maintains the mechanical integrity of the application by design. As the sensor is mounted directly at the pivot point no levers, connecting rods or other mechanical interfaces are needed. Furthermore it adapts to shaft's eccentricity, mounting tolerances and mechanical wear over the life of the application.

The endless rotation sensor is highly configurable with a programmable angular range between 15 and 360 degrees, different signal output options and support for low and high-voltage power supply. Multi-turn configurations are available on request.

APPLICATIONS

Industrial
- Autonomous warehouse robotics
- Robotics and automation feedback
- Robot arm position
- Valve monitoring
- Conveyor operation

Transportation
- Steering angle
- Pedal position
- Fork height and mast tilt
- Bucket position
- Hitch position
- Boom angle
- Joystick controls

Marine
- Steering and shifter sensor
- Engine throttle

Home and Building Automation
- HVAC systems

Medical
- Electric hospital bed
- Mobility chair steering and throttle

Downloaded from Arrow.com.

PST-360

Hall-Effect Through-Shaft Rotary Position Sensor

MECHANICAL SPECIFICATIONS

Rotational life	Up to 50.000.000 cycles
Mechanical angular range	360° (endless rotation)
Rotor diameter[1]	14mm 17mm

[1] Other rotors on request

ELECTRICAL SPECIFICATIONS

Linearity[1]		±1% absolute (±0.5% upon request)
Electrical angular range[2]		Programmable from 15° to 360°
Output		Analog (Ratiometric), PWM Serial Protocol (SPI) CAN SAE J1939 CAN Open
Switch output		Programmable upon request
Resolution	CAN, Analog, PWM SPI	Up to 12 bit Up to 14 bit
Supply voltage[3]		5V ±10% 7V to 15V
Supply current	Single version Redundant version CAN version	Typ 8.5 mA Typ 17 mA Typ 47 mA
Voltage protection		±10 V
Self-diagnostic features		yes

[1] Ferromagnetic materials close to the sensor (i.e. shaft, mounting surface) may affect the sensor's linearity.
[2] For information on multi-turn sensors please contact Piher
[3] Voltages up to 25 V possible on request.

ENVIRONMENTAL SPECIFICATIONS

Operating and storage temperature[1]	-40°C to +125°C
Shock	50g
Vibration	5-2000 Hz; 20g; Amax 0,75 mm
Sealing[2]	IP67, IP69K
Approval	CE[3]

[1] Other specifications available
[2] IP rating on electronics
[3] EMC-testing according to standards EN 61000-6-2 and EN 6100-6-3. CE-approval applies to analogic-simple and analogic-redundant models.

OUTPUT FUNCTIONS

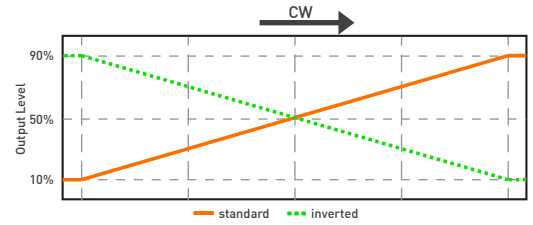

ERA	Mechanical Rotational Angle		
270 →	45°	180°	315°
180 →	90°	180°	270°
120 →	120°	180°	240°
090 →	135°	180°	225°
040 →	160°	180°	200°

ERA	Standard	Inverted	Redundant
360°	C0000	C0001	C0002
270°	C0208	C0158	C0031
180°	C0007	C0072	C0036
120°	C0024	On request	C0032
90°	C0011		C0025
70°	C0150		C0149
60°	C0006		C0020
40°	C0026		C0123

Custom output functions on request.

Downloaded from Arrow.com.

PST-360

Hall-Effect Through-Shaft Rotary Position Sensor

DIMENSIONS (MM)

Outer Dimensions

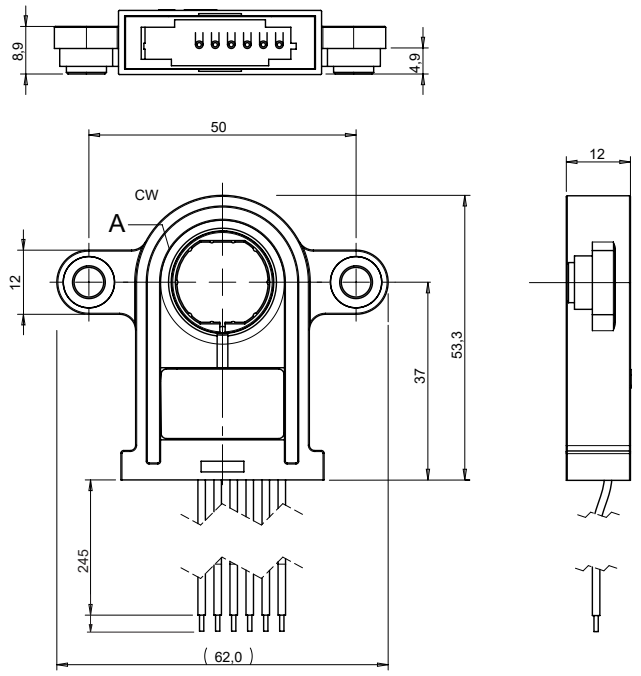

Download the STEP file here:
https://piher.net/piher/?p=838

Shaft should be non-ferromagnetic material. If you want to use a ferromagnetic shaft please contact Piher.

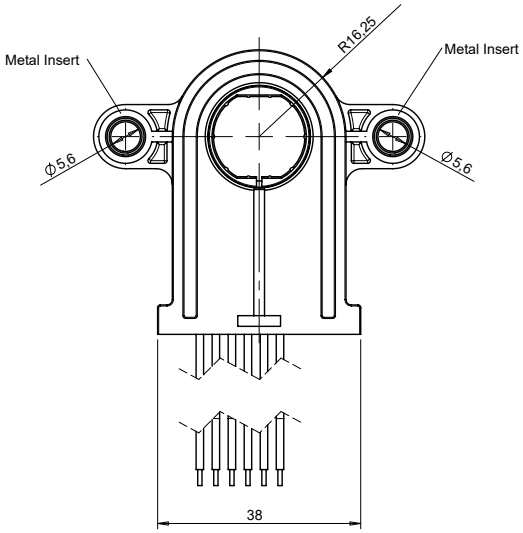

Sensor shown above is the 17mm version with the rotor at zero position. Sensor is delivered at random position. Wires: 0.35mm² TXL SAE J1128

14mm rotor

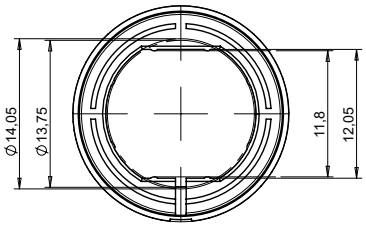

17mm rotor

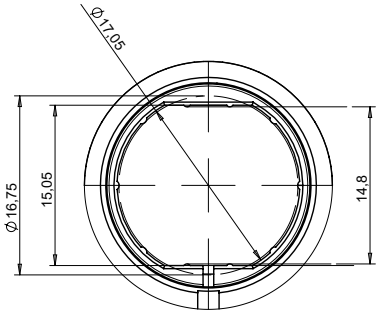

Recommended shaft dimensions

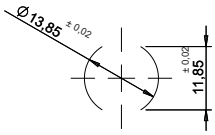

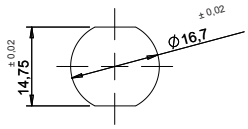

CONNECTION SCHEME

Color	Simple		Redundant		Full-redundant	CAN	SPI
	5V	7V to 15V	5V	7V to 15V			
Brown	Power supply	Power supply	Power supply	Power supply	Power supply 1	Power supply	Power supply
Blue	Ground	Ground	Ground	Ground	Ground 1	Ground	Ground
Black	Signal output	Signal output	Signal output 1	Signal output 1	Ground 2	CAN High	MOSI
White	n/a	n/a	Signal output 2	Signal output 2	Signal output 2	CAN Low	/SS
Red	n/a	n/a	n/a	n/a	Power supply 2	n/a	n/a
Yellow	n/a	n/a	n/a	n/a	Signal output 1	n/a	n/a
Grey	n/a	Not used	n/a	Not used	n/a	n/a	SCLK

More instructions of use on www.piher.net. Connector assembly available on request.

Downloaded from Arrow.com.

PST-360

Hall-Effect Through-Shaft Rotary Position Sensor

HOW TO ORDER (Example: PST360G2-1A-C0001-ERA190-05K)

Simple Output - Analogic, PWM and CAN

PST360G2 - _ 1 _ - C _ _ _ _ - ERA _ _ _ - _ _ K - _ _ _ _

Series	Rotor[1]	Type	Output[2]	Output function[3]	Electric rotational angle[4]	Voltage supply[5]	Temp. range	PWM Frequency Hz[6]
	[empty] = 14mm B = 17mm	1 = simple	A = analogic P = PWM J = CAN SAE J1939 O = CAN OPEN	C0000 C0001	ERA040 ERA041 ... ERA360	05 = 5V ±10% RE = 7V-15V	K = -40°C to +125°C	[empty] = 200Hz F100 = 100Hz F101 = 101Hz ... F999 = 999Hz

Simple output - SPI

PST360G2 - _ 1 S - C _ _ _ _ - ERA _ _ _ - _ _ K

Series	Rotor[1]	Type	Output[2]	Output function[3]	Electric rotational angle[4]	Voltage supply[5]	Temp. range
	[empty] = 14mm B = 17mm	1 = simple	S = SPI	C0000 C0001	ERA040 ERA041 ... ERA360	05 = 5V ±10% RE = 7V-15V	K = -40°C to +125°C

Redundant output - Analogic, PWM and CAN

PST360G2 - _ 2 _ _ - C _ _ _ _ - ERA _ _ _ - _ _ K - _ _ _ _ _ _ _ _

Series	Rotor[1]	Type	Output[2]	Output function[3]	Electric rotational angle[4]	Voltage supply[5]	Temp. range	PWM Frequency Hz. (1)[6]	PWM Frequency Hz. (2)[6]
	[empty] = 14mm B = 17mm	2 = redundant	AA= analogic PP = PWM JJ = CAN SAE J1939 OO = CAN OPEN	C0002	ERA040 ERA041 ... ERA360	05 = 5V ±10% RE = 7V-15V	K = -40°C to +125°C	F100 F101 ... F999	F100 F101 ... F999

Full-redundant output - Analogic and PWM

PST360G2 - _ 3 _ _ - C _ _ _ _ - ERA _ _ _ - 05 K - _ _ _ _ _ _ _ _

Series	Rotor[1]	Type	Output[2]	Output function[3]	Electric rotational angle[4]	Voltage supply	Temp. range	PWM Frequency Hz. (1)[5]	PWM Frequency Hz. (2)[5]
	[empty] = 14mm B = 17mm	3 = full-redundant	AA= analogic PP = PWM	C0002	ERA040 ERA041 ... ERA360	05 = 5V ±10%	K = -40°C to +125°C	F100 F101 ... F999	F100 F101 ... F999

1 Other rotors available on request.
2 The analog output is ratiometric, proportional: - for supply voltage "5V" to input voltage; -for supply voltage "RE" to 5V.
3 Other output functions available, please check availability. Enter CXXXX as long as the new output function is not defined.
4 Models with ERA ‹ 40° available on request
5 Voltages up to 25V possible on request.
6 Leave empty if not applicable. Default frequency is 200 Hz

Downloaded from Arrow.com.

PST-360

Hall-Effect Through-Shaft Rotary Position Sensor

SPECIAL ROTORS

Ref. 3457	Ref. 3458
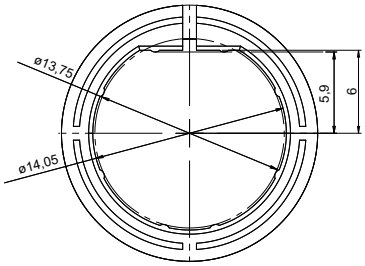	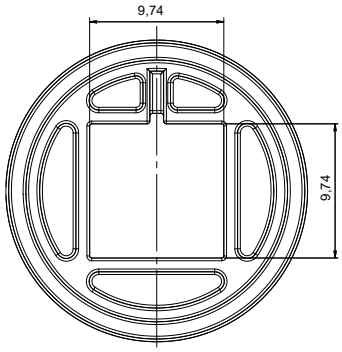

For more information visit: www.piher.net

MOUNTING INSTRUCTIONS

1. Place the component on a flat surface.
2. Fit the shaft of the application (see recommended shaft dimensions) through the sensor's rotor avoiding any mechanical play/wobble.
3. Fasten the two M5 screws (M5 washers are recommended).

OUR ADVANTAGE

- ▶ Leading-edge innovative position sensing solutions
  - ▷ Contactless (Hall-effect and Inductive Technology)
  - ▷ Contacting (Potentiometers, Printed Electronics)
- ▶ Engineering design-in support
- ▶ All our products can be customized to fit target application and customer requirement
- ▶ Capability to move seamlessly from development to true high-volume production
- ▶ A global footprint with global engineering and commercial support
- ▶ One-stop shop not limited to position sensors (temperature, pressure, gas,...) through group collaboration
- ▶ Flexibility and entrepreneurship of a medium-sized company with the backing of Amphenol Corporation

Please always use the latest updated datasheets and 3D models published on our website.

Disclaimer:
The product information in this catalog is for reference purposes. Please consult for the most up to date and accurate design information.
Piher Sensors & Controls S.A., its affiliates, agents, and employees, and all persons acting on its or their behalf (collectively, "Piher"), disclaim any and all liability for any errors, inaccuracies or incompleteness contained herein or in any other disclosure relating to any product described herein.
Piher disclaims any and all liability arising out of the use or application of any product described herein or of any information provided herein to the maximum extent permitted by law. The product specifications do not expand or otherwise modify Piher's terms and conditions of sale, including but not limited to the warranty expressed therein, which apply to these products.
No license, express or implied, by estoppel or otherwise, to any intellectual property rights is granted by this document or by any conduct of Piher.
The products shown herein are not designed for use in medical, life-saving, or life-sustaining applications unless otherwise expressly indicated. Customers using or selling Piher products not expressly indicated for use in such applications do so entirely at their own risk and agree to fully indemnify Piher for any damages arising or resulting from such use or sale. Please contact authorized Piher personnel to obtain written terms and conditions regarding products designed for such applications.
Product names and markings noted herein may be trademarks of their respective owners. Information contained in and/or attached to this catalogue may be subject to export control regulations of the European Community, USA, or other countries. Each recipient of this document is responsible to ensure that usage and/or transfer of any information contained in this document complies with all relevant export control regulations. If you are in any doubt about the export control restrictions that apply to this information, please contact the sender immediately. For any Piher Exports, Note: All products / technologies are EAR99 Classified commodities. Exports from the United States are in accordance with the Export Administration Regulations. Diversion contrary to US law is prohibited.

Rev: 02122022 © 2022 Piher Sensors & Controls S.A

CONTACT

Piher Sensing Systems
Polígono Industrial Municipal
Vial T2, Nº22
31500 Tudela
Spain

sales@piher.net

Europe: +34 948 820 450
Americas: +1 636 251 0855
Asia Pacific: +65 9641 8886
India: +91 9538 686 586

Downloaded from Arrow.com.