DATA CONTAINED IN THIS DOCUMENT IS PROPRIETARY TO TROMPETER ELECTRONICS INC. AND SHALL NOT BE DISCLOSED, COPIED OR USED FOR PROCUREMENT OR MANUFACTURE WITHOUT EXPRESS WRITTEN PERMISSION OF TROMPETER ELECTRONICS INC.

		5-0004	SH 1
REV	DESCRIPTION	DATE	APPROVED
C	REVISED PER ECO #15531	7/30/04	WJ

TABLE 1

DASH NO	MODEL NO	CENTER CONTACT/ INTMD CONTACT TYPE
-1	PLR3455ACP	SOCKET/PIN
-2	PLR3455ACS	PIN/SOCKET

TABLE 2

CABLE GROUP NO	CABLES ACCOMMODATED 9	A HEX	B MAX	C DIM	ASSEMBLE PER
-201	M17/176-00002	.255	1.60	1.43	TAI-170
-202	TWC-78-1, TROMPETER				
-203	TWC-124-1A, TROMPETER				
-204	10602, RAYCHEM				
-205	TWAC-78-1F2, TROMPETER				
-206	7826D0130, RAYCHEM				
-208	202-3927, MICRODOT				
-209	202-3942, MICRODOT				
-212	2524E0114, RAYCHEM				
-217	GC875TM24H, GRUMMAN				
-218	EPD22188B, RAYCHEM				
-219	2526D1114, RAYCHEM				
-220	GC875RR1, GRUMMAN				
-221	10614, RAYCHEM				
-222	10613, RAYCHEM				
-223	HMS2-1149, HUGHES				
-303	10598, RAYCHEM 7	.344	1.88	1.49	TAI-186

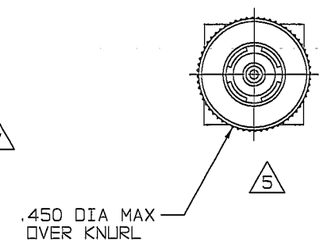

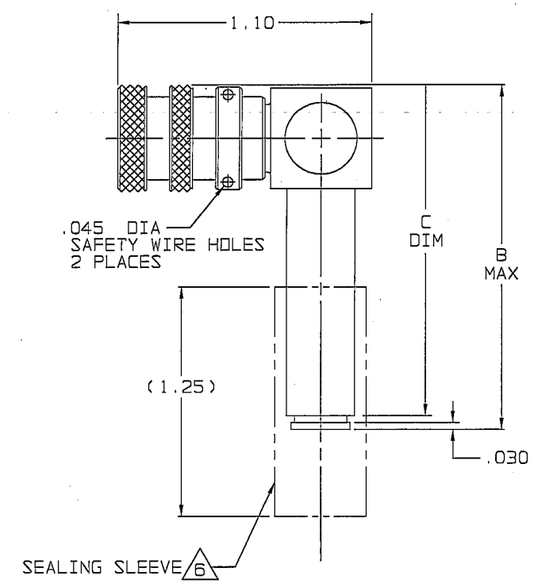

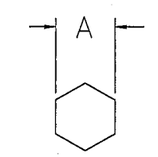

RECOMMENDED
HEX CRIMP

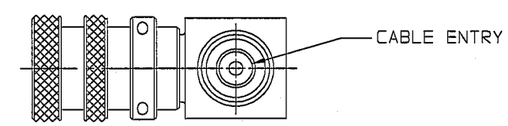

-1 -201 SHOWN

9 CHECK WITH CABLE MANUFACTURER FOR OUTGASSING PROPERTIES OF THE SELECTED CABLE

8. ALL MATERIALS MEET THE OUTGASSING REQUIREMENTS OF NASA SPECIFICATION SP-R-0022A AND THE REQUIREMENTS OF TEI'S SPACE RATED SPECIFICATION TT-09

7 STRAIN RELIEF SUPPLIED LOOSE WITH -303 ONLY

6 SEALING SLEEVE & CRIMP BUSHING SUPPLIED LOOSE WITH EACH CONNECTOR; EXCEPT SEALING SLEEVE NOT USED ON -205, -208 & -223

5 BOTTOM PORTION NOT SHOWN FOR CLARITY

RED INDICATES ORIGINAL

4. EXAMPLE OF COMPLETE PART NO:

5-0004 - 1 - 201

BASIC PART NO — DASH NO: CENTER CONTACT/ INTERMEDIATE CONTACT TYPE (SEE TABLE 1) — CABLE GROUP NO (SEE TABLE 2)

3. CONCENTRIC TWINAX 4 PIECE ASSY, RIGHT ANGLE FULL CRIMP CABLE PLUG, SOCKET CENTER CONTACT AND PIN INTERMEDIATE CONTACT OR PIN CENTER CONTACT AND SOCKET INTERMEDIATE CONTACT

2. FINISH: TFS-1U, NICKEL

1. ALL DIM ARE IN INCHES

INTERPRET DRAWING PER MIL-STD-100
DIMENSIONS ARE IN INCHES AND INCLUDE FINISH THICKNESS UNLESS OTHERWISE SPECIFIED

TOL: UNLESS SPECIFIED .XX .XXX .XXXX ANGLES

DRAWN	HM	7-28-04
CHECKED	T. Kha	7-29-04
QUALITY	WJ	7/29/04
MANUF.	WJ	7/29/04
APPROVED	WJ	7/29/04

CAD FILE NO. 5-0004B

MATERIAL:

FINISH:

DO NOT SCALE DWG

NEXT ASSY

TROMPETER ELECTRONICS, INC.

TITLE: PLR3455AC/P/S SPACE RATED

SIZE	CAGE CODE	DRAWING NO.	REV.
B	14949	5-0004	C

SCALE NONE | DATE: 12-8-03 | SHEET 1C