	COUNT	DESCRIPTION OF REVISIONS	BY	CHKD	DATE		COUNT	DESCRIPTION OF REVISIONS	BY	CHKD	DATE
△					. .	△					. .
△					. .	△					. .
△					. .	△					. .

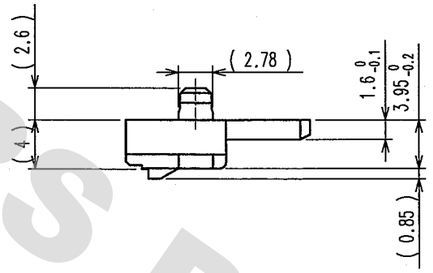

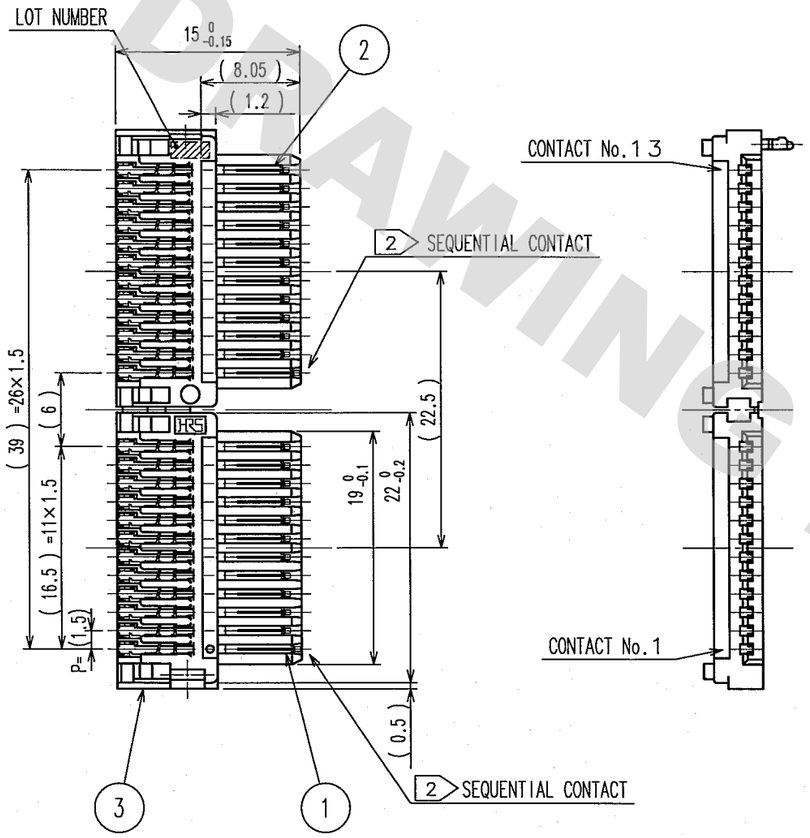

SECTIONAL VIEW OF WIRE ASSEMBLY(5 : 1)

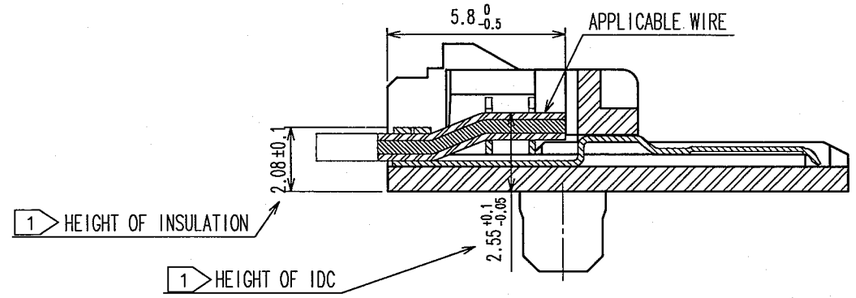

DRAWING FOR PACKING(1 : 2)

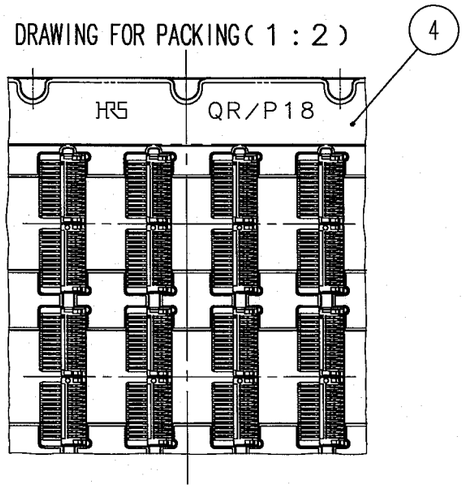

NOTES 1 HEIGHT OF IDC AND INSULATION ARE SPECIFIED FOR EACH CABLE TYPE.

2 EITHER ONE OF THE SEQUENTIAL CONTACTS ARE MATED PRIOR TO THE OTHER CONTACTS AT THE BEGGINING OF MATING OPERATION.

NO.	MATERIAL	FINISH, REMARKS	NO.	MATERIAL	FINISH, REMARKS
2	COOPER ALLOY	UNDERPLATING :NICKELPLATING 1μm CONTACT AREA :GOLD PLATING 0.2μm TERMINAL AREA :GOLD FLASH PLATING	4	POLYSTYRENE	NATURAL
1	COOPER ALLOY	UNDERPLATING :NICKELPLATING 1μm CONTACT AREA :GOLD PLATING 0.2μm TERMINAL AREA :GOLD FLASH PLATING	3	POLYAMIDE	BLACK UL94V-0

CODE NO.(OLD)	DRAWN	DESIGNED	CHECKED	APPROVED	RELEASED
	Y. Mamada '07. 1. 11	A. Kodama '07. 1. 11	S. Matsuzaki 07. 1. 11	S. Matsuzaki 07. 1. 11	. .

SCALE 2 : 1	DRAWING NO. EDC3-125283-01	PART NO. QR/P18-24PC
UNITS mm	HRS HIROSE ELECTRIC CO., LTD	CODE NO. CL221-0295-3 1/1

FORM NO.229

Q1

TO
Q

DRAWING FOR REFERENCE: This is subject to change without notice
08/11/2012

HRS DRAWING FOR REFERENCE