REVISIONS		
ISS	ZONE	DESCRIPTION\PER REQUEST\DATE

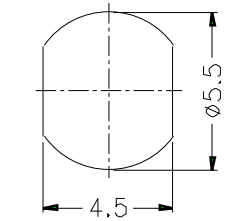

RECOMMENDED MOUNTING HOLE

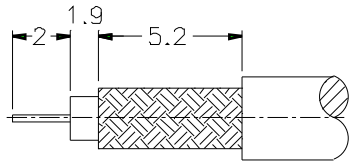

RECOMMENDED CABLE STRIPPING DIM'S

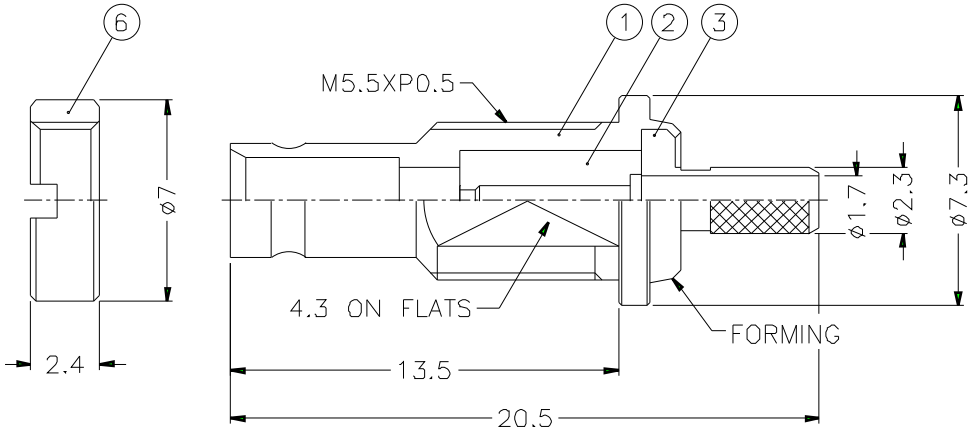

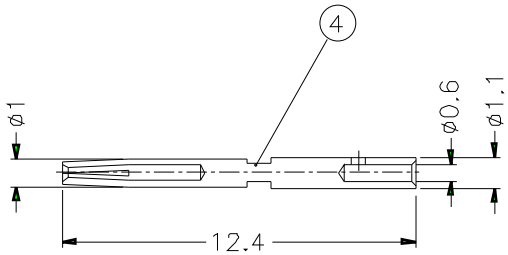

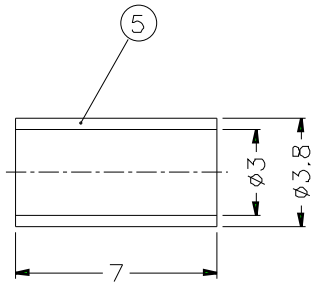

NOTES: FINISH (PLATING THICKNESS IN MICRO-INCHES)
1. BRASS PER QQ-B-626
2. BERYLLIUM COPPER PER QQ-C-530
3. NICKEL PL. 100 MIN. THICK OVER COPPER STRIKE
4. GOLD PL. 3 MIN. THICK OVER NICKEL PL. 100 MIN. THICK OVER COPPER STRIKE
5. GOLD PL. 30 MIN. THICK OVER NICKEL PL. 100 MIN. THICK OVER COPPER STRIKE
6. TEFLON MIL-P-19468

1. CRIMPED FERRULE HEX CRIMP SIZE .128"
2. CONTACT PIN TO SOLDER
3. MAX. PANEL THICKNESS=3mm

NO.	DESCRIPTION	MATERIAL	FINISH	Q'TY	DRAWING NO.
6	NUT	NOTE 1	NOTE 3	1	123-JACK-SN
5	FERRULE	COPPER	NOTE 3	1	FR-38/3X7C
4	CONTACT PIN	NOTE 2	NOTE 5	1	1236421A1-4-11/06
3	BARREL	NOTE 1	NOTE 4	1	SMB6121A1-4-23/17-C
2	INSULATOR	NOTE 6	NATURAL	1	1236421A1-2T-50
1	BODY	NOTE 1	NOTE 4	1	1236421A1-1

DIMENSIONS ARE IN MILLIMETERS

UNLESS OTHERWISE SPECIFIED TOLERANCES
0 5-6 = ±0.2
6-30 = ±0.4
30-120 = ±0.6
120-315 = ±1
315-1000 = ±1.6
1000-2000 = ±2.4

SCALE 4/1 ISSUE A

PART NO. 1236421A1-N/3GT30G-5-50

APPROVED DATE 10-11-01'

CHECKED DATE 10-11-01'

DRAWN DATE 10-11-01'

FILE NO.

Amphenol

TITLE 1.0/2.3 CRIMP JACK

DRAWING NO. KJ-1236421A1-N/3GT30G-316U-50

ITEM NO.