TOSHIBA CMOS DIGITAL INTEGRATED CIRCUIT SILICON MONOLITHIC

TC74HC280AP, TC74HC280AF

9 – BIT PARITY GENERATOR / CHECKER

The TC74HC280A is a high speed CMOS 9 - BIT PARITY GENERATOR fabricated with silicon gate C²MOS technology.
It achieves the high speed operation similar to equivalent LSTTL while maintaining the CMOS low power dissipation.
The TC74HC280A is composed of nine data inputs A thru I and odd / even parity outputs Σ ODD and Σ EVEN.
The odd parity output is high when an odd number of data inputs are high. The even parity output is high when an even number of data inputs are high.
The word - length capability is easily expanded by cascading.
All inputs are equipped with protection circuits against static discharge or transient excess voltage.

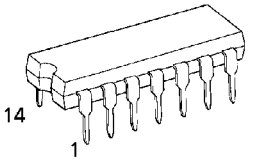

P (DIP14-P-300-2.54)
Weight : 0.96g (Typ.)

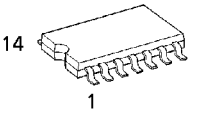

F (SOP14-P-300-1.27)
Weight : 0.18g (Typ.)

FEATURES :

- High Speed ····· t_{pd} = 22ns(typ.) at V_{CC} = 5V
- Low Power Dissipation ····· I_{CC} = 4μA(Max.) at Ta = 25°C
- High Noise Immunity ····· $V_{NIH} = V_{NIL}$ = 28% V_{CC} (Min.)
- Output Drive Capability ····· 10 LSTTL Loads
- Symmetrical Output Impedance ··· $|I_{OH}| = I_{OL}$ = 4mA(Min.)
- Balanced Propagation Delays ····· $t_{pLH} \simeq t_{pHL}$
- Wide Operating Voltage Range ···· V_{CC} (opr.) = 2V ~ 6V
- Pin and Function Compatible with 74LS280

PIN ASSIGNMENT

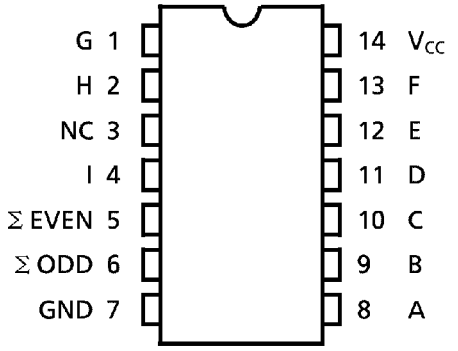

(TOP VIEW)
NC:No Connection

TRUTH TABLE

Number of inputs A through I that are High	Outputs	
	Σ EVEN	Σ ODD
0, 2, 4, 6, 8	H	L
1, 3, 5, 7, 9	L	H

IEC LOGIC SYMBOL

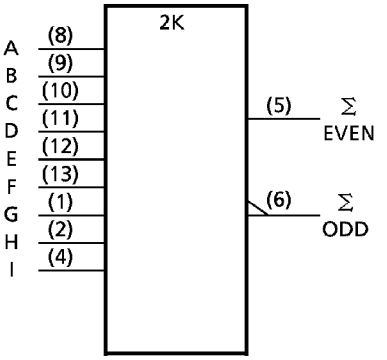

961001EBA2

● TOSHIBA is continually working to improve the quality and the reliability of its products. Nevertheless, semiconductor devices in general can malfunction or fail due to their inherent electrical sensitivity and vulnerability to physical stress. It is the responsibility of the buyer, when utilizing TOSHIBA products, to observe standards of safety, and to avoid situations in which a malfunction or failure of a TOSHIBA product could cause loss of human life, bodily injury or damage to property. In developing your designs, please ensure that TOSHIBA products are used within specified operating ranges as set forth in the most recent products specifications. Also, please keep in mind the precautions and conditions set forth in the TOSHIBA Semiconductor Reliability Handbook.

ABSOLUTE MAXIMUM RATINGS

PARAMETER	SYMBOL	VALUE	UNIT
Supply Voltage Range	V_{CC}	−0.5~7	V
DC Input Voltage	V_{IN}	−0.5~V_{CC}+0.5	V
DC Output Voltage	V_{OUT}	−0.5~V_{CC}+0.5	V
Input Diode Current	I_{IK}	±20	mA
Output Diode Current	I_{OK}	±20	mA
DC Output Current	I_{OUT}	±25	mA
DC V_{CC}/Ground Current	I_{CC}	±50	mA
Power Dissipation	P_D	500 (DIP)* / 180 (SOP)	mW
Storage Temperature	T_{stg}	−65~150	°C

*500mW in the range of Ta=−40°C~65°C. From Ta=65°C to 85 °C a derating factor of −10mW/°C shall be applied until 300mW.

RECOMMENDED OPERATING CONDITIONS

PARAMETER	SYMBOL	VALUE	UNIT
Supply Voltage	V_{CC}	2~6	V
Input Voltage	V_{IN}	0~V_{CC}	V
Output Voltage	V_{OUT}	0~V_{CC}	V
Operating Temperature	T_{opr}	−40~85	°C
Input Rise and Fall Time	t_r, t_f	0~1000 (V_{CC}=2.0V) 0~ 500 (V_{CC}=4.5V) 0~ 400 (V_{CC}=6.0V)	ns

DC ELECTRICAL CHARACTERISTICS

PARAMETER	SYMBOL	TEST CONDITION		V_{CC} (V)	Ta=25°C MIN.	Ta=25°C TYP.	Ta=25°C MAX.	Ta=−40~85°C MIN.	Ta=−40~85°C MAX.	UNIT
High - Level Input Voltage	V_{IH}			2.0	1.50	−	−	1.50	−	V
				4.5	3.15	−	−	3.15	−	
				6.0	4.20	−	−	4.20	−	
Low - Level Input Voltage	V_{IL}			2.0	−	−	0.50	−	0.50	V
				4.5	−	−	1.35	−	1.35	
				6.0	−	−	1.80	−	1.80	
High - Level Output Voltage	V_{OH}	V_{IN}= V_{IH} or V_{IL}	I_{OH}=−20μA	2.0	1.9	2.0	−	1.9	−	V
				4.5	4.4	4.5	−	4.4	−	
				6.0	5.9	6.0	−	5.9	−	
			I_{OH}=−4 mA	4.5	4.18	4.31	−	4.13	−	
			I_{OH}=−5.2mA	6.0	5.68	5.80	−	5.63	−	
Low - Level Output Voltage	V_{OL}	V_{IN}= V_{IH} or V_{IL}	I_{OL}=20μA	2.0	−	0.0	0.1	−	0.1	V
				4.5	−	0.0	0.1	−	0.1	
				6.0	−	0.0	0.1	−	0.1	
			I_{OL}=4 mA	4.5	−	0.17	0.26	−	0.33	
			I_{OL}=5.2mA	6.0	−	0.18	0.26	−	0.33	
Input Leakage Current	I_{IN}	V_{IN}=V_{CC} or GND		6.0	−	−	±0.1	−	±1.0	μA
Quiescent Supply Current	I_{CC}	V_{IN}=V_{CC} or GND		6.0	−	−	4.0	−	40.0	

961001EBA2'

- The products described in this document are subject to foreign exchange and foreign trade control laws.
- The information contained herein is presented only as a guide for the applications of our products. No responsibility is assumed by TOSHIBA CORPORATION for any infringements of intellectual property or other rights of the third parties which may result from its use. No license is granted by implication or otherwise under any intellectual property or other rights of TOSHIBA CORPORATION or others.
- The information contained herein is subject to change without notice.

AC ELECTRICAL CHARACTERISTICS (C_L = 15pF, V_{CC} = 5V, Ta = 25°C, Input $t_r = t_f$ = 6ns)

PARAMETER	SYMBOL	TEST CONDITION	MIN.	TYP.	MAX.	UNIT
Output Transition Time	t_{TLH} t_{THL}		—	4	8	ns
Propagation Delay Time	t_{pLH} t_{pHL}		—	22	35	

AC ELECTRICAL CHARACTERISTICS (C_L = 50pF, Input $t_r = t_f$ = 6ns)

PARAMETER	SYMBOL	TEST CONDITION		Ta = 25°C			Ta = −40~85°C		UNIT
			V_{CC} (V)	MIN.	TYP.	MAX.	MIN.	MAX.	
Output Transition Time	t_{TLH} t_{THL}		2.0	—	30	75	—	95	ns
			4.5	—	8	15	—	19	
			6.0	—	7	13	—	16	
Propagation Delay Time	t_{pLH} t_{pHL}		2.0	—	80	200	—	250	
			4.5	—	26	40	—	50	
			6.0	—	22	34	—	43	
Input Capacitance	C_{IN}			—	5	10	—	10	pF
Power Dissipation Capacitance	C_{PD} (1)			—	61	—	—	—	

Note (1) C_{PD} is defined as the value of the internal equivalent capacitance which is calculated from the operating current consumption without load.
Average operating current can be obtained by the equation :

$$I_{CC}(opr) = C_{PD} \cdot V_{CC} \cdot f_{IN} + I_{CC}$$

SYSTEM DIAGRAM

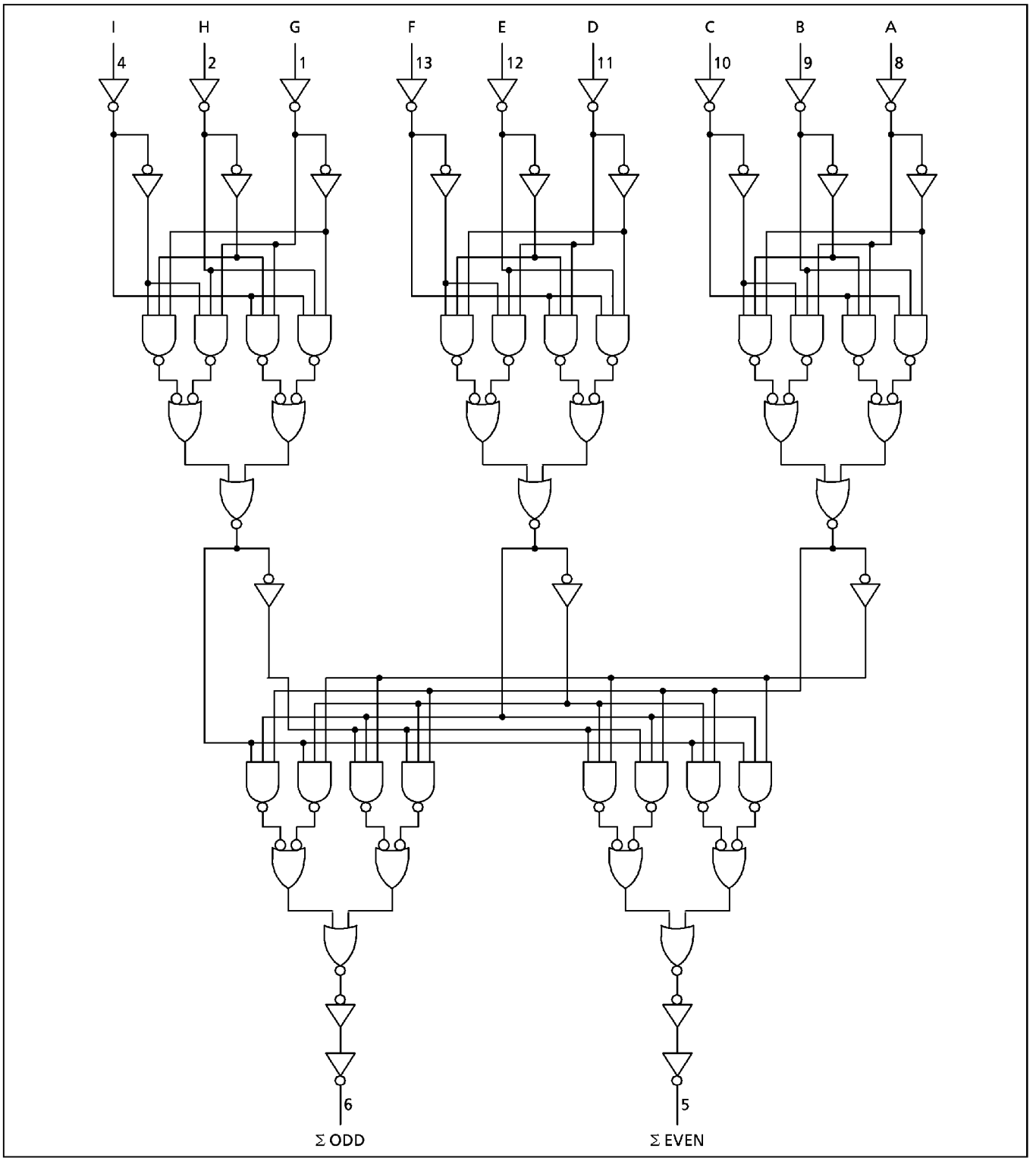

DIP 14PIN OUTLINE DRAWING (DIP14-P-300-2.54) Unit in mm

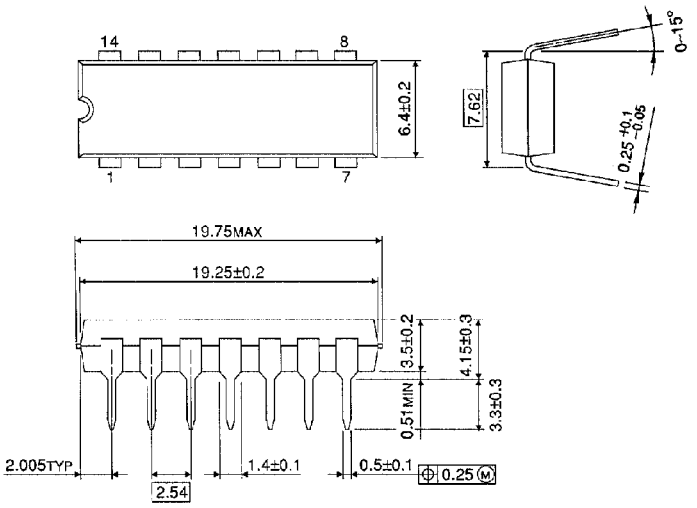

Weight : 0.96g (Typ.)

SOP 14PIN (200mil BODY) OUTLINE DRAWING (SOP14-P-300-1.27) Unit in mm

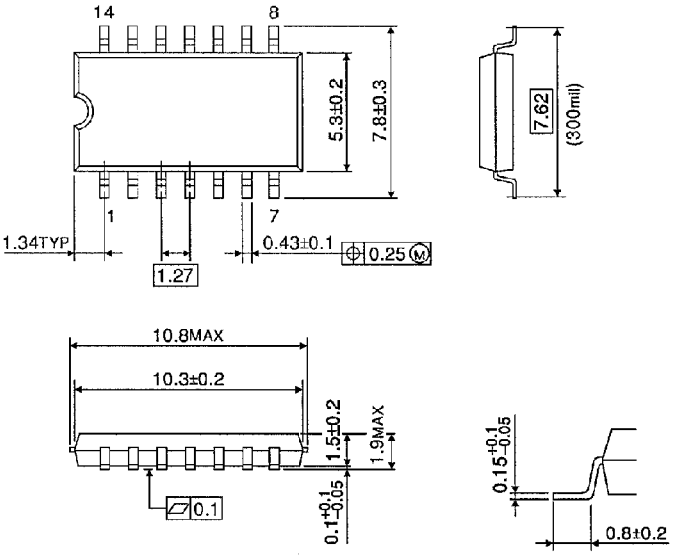

Weight : 0.18g (Typ.)