ISD ARM® Cortex®-M0 SoC
ISD91200 Series
Datasheet

The information described in this document is the exclusive intellectual property of
Nuvoton Technology Corporation and shall not be reproduced without permission from Nuvoton.

Nuvoton is providing this document only for reference purposes of ISD ChipCorder microcontroller based system design. Nuvoton assumes no responsibility for errors or omissions.

All data and specifications are subject to change without notice.

For additional information or questions, please contact: Nuvoton Technology Corporation.

Release Date: Feb. 24, 2023
Revision V1.8

TABLE OF CONTENTS

1 GENERAL DESCRIPTION 4
2 FEATURES 5
2.1 Selection Guide 9
2.1.1 ISD91200RI/CRI/PRI/GRI sereies (non ISD91200B) 9
2.1.2 ISD91200B series (Bridge Sense) 10
2.1.3 ISD91200YI/CYI sereies (non ISD91200B) 11
3 PART INFORMATION AND PIN CONFIGURATION 12
3.1 Pin Configuration 12
3.1.1 ISD91200 LQFP 64 pin (Normal & C series) 12
3.1.2 ISD91200 LQFP 64 pin (P series) 13
3.1.3 ISD91200 LQFP 64 pin (G series) 14
3.1.4 ISD91200 LQFP 64 pin (B series) 15
3.1.5 ISD91200 QFN 32 pin (Y series) 16
3.2 Pin Description 17
3.2.1 ISD91200RI/CRI/PRI/GRI sereies (non ISD91200B) 17
3.2.2 ISD91200B sereies difference 23
3.2.3 ISD91200YI/ISD91200CYI (QFN32) 24
4 BLOCK DIAGRAM 27
5 APPLICATION CIRCUIT 28
5.1 ISD91200RI/CRI/PRI/GRI Series (non ISD91200B) 28
5.2 ISD91200B Series 29
5.3 ISD91200YI/CYI Series (non ISD91200B) 30
6 ELECTRICAL CHARACTERISTICS 31
6.1 Absolute Maximum Ratings 31
6.2 DC Electrical Characteristics 32
6.3 AC Electrical Characteristics 36
6.3.1 External 32kHz XTAL Oscillator 36
6.3.2 Internal 49.152MHz Oscillator 36
6.3.3 Internal 10 kHz Oscillator 36
6.3.4 External 12MHz XTAL Oscillator 36
6.3.5 Reset Characteristics 36
6.4 Analog Characteristics 38
6.4.1 ADC and Speaker Driver 38
6.4.2 PGA 38

6.4.3 ALC and MICBIAS 39
6.4.4 LDO and Power Management 40
6.4.5 Brownout Detector 40
6.4.6 Power-On Reset (VCCD) 41
6.4.7 Comparator(for capsense) 42
6.4.8 OP Amplifier 42
6.4.9 Comparator(for OP) 43
6.4.10 SARADC 43
7 PACKAGE DIMENSIONS 45
7.1 LQFP 64L (7x7x1.4mm footprint 2.0mm) 45
7.2 QFN 32L 4X4 mm2, Thickness: 0.8mm (Max), Pitch: 0.40mm 46
8 ORDERING INFORMATION 47
9 REVISION HISTORY 48

1 GENERAL DESCRIPTION

The ISD91200 series is a system-on-chip product optimized for low power, audio record and playback with an embedded ARM® Cortex™-M0 32-bit microcontroller core.

The ISD91200 device embeds a Cortex™-M0 core running up to 50 MHz with 64K/128K byte of non-volatile flash memory and 12K-byte of embedded SRAM. It also comes equipped with a variety of peripheral devices, such as Timers, Watchdog Timer (WDT), Real-time Clock (RTC), Peripheral Direct Memory Access (PDMA), a variety of serial interfaces (UART, SPI/SSP, I^2C, I^2S), PWM modulators, GPIO, LDO, SDADC, SARADC, DPWM, Low Voltage Detector and Brown-out detector.

The ISD91200 comes equipped with a rich set of power saving modes including a Deep Power Down (DPD) mode drawing less than 1μA. A micro-power 10KHz oscillator can periodically wake up the device from deep power down to check for other events. Standby Power Down (SPD) mode can maintain a real time clock function with less than 5μA.

For audio functionality the ISD91200 includes a Sigma-Delta ADC with 91dB SNR performance coupled with a Programmable Gain Amplifier (PGA with 0-6/12dB gain) and volume control (36dB to -108dB) in digital domain to enable direct connection of a microphone. Audio output is provided by a Differential Class D amplifier (DPWM) that can deliver 0.5W of power to an 8Ω speaker.

The ISD91200 provides eight analog enabled general purpose IO pins (GPIO). These pins can be configured to connect to an analog comparator, can be configured as analog current sources or can be routed to the SDADC for analog conversion. They can also be used as a relaxation oscillator to perform capacitive touch sensing.

2 FEATURES

- Core
  - ARM® Cortex™-M0 core running up to 50 MHz for normal speed.
  - One 24-bit System tick timer for operating system support.
  - Supports a variety of low power sleep and power down modes.
  - Single-cycle 32-bit hardware multiplier.
  - NVIC (Nested Vector Interrupt Controller) for 32 interrupt inputs, each with 4-levels of priority.
  - Serial Wire Debug (SWD) supports with 2 watch-points/4 breakpoints.
- Power Management
  - Wide operating voltage range from 1.8V to 5.5V.
  - Power management Unit (PMU) providing four levels of power control.
  - Deep Power Down (DPD) mode with sub micro-amp leakage (<2µA).
  - Wakeup from Deep Power Down via dedicated WAKEUP pin or timed operation from internal low power 10KHz oscillator.
  - Standby current in SPD mode with limited RAM (256byte SBRAM) retention and RTC operation <5µA.
  - Standby current in STOP mode with full SRAM retention <10µA.
  - Wakeup from Standby can be from any GPIO interrupt, RTC or BOD.
  - Sleep mode with minimal dynamic power consumption.
  - 3V LDO for operation of external 3V devices such as serial flash.
- Flash EPROM Memory
  - 64K/128K bytes Flash EPROM for program code and data storage.
  - Mini-cache to maintain near zero-wait state memory access.
  - Support In-system program (ISP) and In-circuit program (ICP) application code update
  - 512 byte page erase for flash.
  - Configurable boundary to delineate code and data flash.
  - Support 2 wire In-circuit Programming (ICP) update from SWD ICE interface
- SRAM Memory
  - 12K bytes embedded SRAM.
- Clock Control
  - High speed and low speed oscillators providing flexible selection for different applications. No external components necessary.
  - Built-in trimmable oscillator with range of 16-50MHz. Factory trimmed within 1% to settings of 49.152MHz and 32.768MHz. User trimmable with in-built frequency measurement block (OSCFM) using reference clock of 32kHz crystal or external reference source.
  - Ultra-low power (<1uA) 10kHz oscillator for watchdog and wakeup from power-down or sleep operation.
  - External 32kHz crystal input for RTC function and low power system operation.
  - External 12 MHz crystal input for precise timing operation.
- GPIO
  - Four I/O modes:
    - Quasi bi-direction
    - Push-Pull output
    - Open-Drain output
    - Input only with high impendence
  - Schmitt trigger input selectable.
  - I/O pin can be configured as interrupt source with edge/level setting.
  - Supports High Driver and High Sink IO mode.
  - Capacitive Touch: 16

- Maximal 32 GPIO

- Audio Analog to Digital converter (no function in ISD91200B series)
  - Sigma Delta ADC with configurable decimation filter and 16 bit output.
  - 90dB Signal-to-Noise (SNR) performance.
  - Programmable gain amplifier with 32 steps from -12 to 35.25dB in 0.75dB steps.
  - Boost gain stage of 26dB, giving maximum total gain of 61dB.
  - Input selectable from dedicated MIC pins or analog enabled GPIO.
  - Programmable biquad filter to support multiple sample rates from 8-32kHz.
  - DMA support for minimal CPU intervention.

- Differential Audio PWM Output (DPWM)
  - Direct connection of speaker
  - 0.5W drive capability into 8Ω load.
  - Configurable up-sampling to support sample rates from 8-48kHz.
  - Programmable volume control from -128dB to +36dB in 0.5 dB step
  - Programmable biquad filter to support multiple sample rates from 8-48kHz
  - DMA support for minimal CPU intervention.

- Timers
  - Two timers with 8-bit pre-scaler and 24-bit resolution.
  - Counter auto reload.

- Watch Dog Timer
  - Default ON/OFF by configuration setting
  - Multiple clock sources
  - 8 selectable time out period from micro seconds to seconds (depending on clock source)
  - WDT can wake up power down/sleep.
  - Interrupt or reset selectable on watchdog time-out.

- RTC
  - Real Time Clock counter (second, minute, hour) and calendar counter (day, month, year)
  - Alarm registers (second, minute, hour, day, month, year)
  - Selectable 12-hour or 24-hour mode
  - Automatic leap year recognition
  - Time tick and alarm interrupts.
  - Device wake up function.
  - Supports software compensation of crystal frequency by compensation register (FCR)

- PWM/Capture
  - Four 16-bit PWM generators provide four single ended PWM outputs or two complementary paired PWM outputs.
  - The PWM generator equipped with a clock source selector, a clock divider, an 8-bit pre-scaler and Dead-Zone generator for complementary paired PWM.
  - PWM interrupt synchronous to PWM period.
  - 16-bit digital Capture timers (shared with PWM timers) provide rising/falling capture inputs.
  - Support Capture interrupt

- UART
  - Up to two uart controller
  - UART ports with flow control (TX, RX, CTS and RTS)
  - 8-byte FIFO.
  - Support IrDA (SIR) and LIN function
  - Programmable baud-rate generator up to 1/16 of system clock.

- SPI

- Up to two SPI controller
- SPI Clock up to 24 MHz.
- SPI data rate in Quad mode up to 98 Mbps
- Support MICROWIRE/SPI master/slave mode (SSP)
- Full duplex synchronous serial data transfer
- Variable length of transfer data from 1 to 4 bytes
- MSB or LSB first data transfer
- 2 slave/device select lines when used in master mode.
- DMA support.(64bit (16x4) data FIFO)
- Quad/Dual SPI support.

- I2C
  - Master/Slave up to 1Mbit/s
  - Bidirectional data transfer between masters and slaves
  - Multi-master bus (no central master).
  - Arbitration between simultaneously transmitting masters without corruption of serial data on the bus
  - Serial clock synchronization allows devices with different bit rates to communicate via one serial bus.
  - Serial clock synchronization can be used as a handshake mechanism to suspend and resume serial transfer.
  - Programmable clock allowing versatile rate control.
  - Supports multiple address recognition (four slave address with mask option)
  - Supports wake-up by address recognition (for 1st slave address only)

- I^2S
  - Interface with external audio CODEC.
  - Operate as either master or slave.
  - Capable of handling 8, 16, 24 and 32 bit word sizes
  - Mono and stereo audio data supported
  - I^2S and MSB justified data format supported
  - Two 8 word FIFO data buffers are provided, one for transmit and one for receive
  - Generates interrupt requests when buffer levels cross a programmable boundary
  - Supports DMA requests, for transmit and receive

- SARADC
  - 12-bit SAR ADC with 700K SPS
  - Up to 12-ch single-end input
  - Single scan/single cycle scan/continuous scan
  - Each channel with individual result register
  - Scan on enabled channels
  - Threshold voltage detection
  - Conversion start by software programming or external input
  - Supports PDMA mode

- Bridge Sense ADC (only support in ISD91200B series)
  - On chip calibaration
  - 8 steps Programmable Gain Amplifier (BSPGA)
  - Programmable data output rate
  - 21 bit precision @ moving average 6.4 SPS

- Low Voltage Reset
  - Threshold voltage levels: 1.8V

- Brown-out detector
  - Supports 8-level brown-out setting.

- Supports time-multiplex operation to minimize power consumption.
- Supports Brownout Interrupt and Reset option

- Built in Low Dropout Voltage Regulator (LDO)
  - Capable of delivering 30mA load current.
  - Configurable 8 output voltage selections from 1.5V – 3.3V.
  - LDO output powers IO ring for GPIOA<7:0> and can supply power to external SPI Flash.
  - Can be bypassed and voltage domain supplied directly from system power.
- Additional Features
  - Over temperature alarm. Can generate interrupt if device exceeds safe operating temperature.
  - Temperature proportional voltage source which can be routed to ADC for temperature measurements.
  - Digital Microphone interface.
  - 2 Low noise high impedance high working temperature OPAMPs suitable for smoke-detect application.
- Standby current in STOP mode with SRAM retention <=10µA at 25°C.
- Operating Temperature: -40C~85C
- Package
  - LQFP64
  - QFN32
  - Package is Halogen-free, RoHS-compliant and TSCA-compliant

2.1 Selection Guide

2.1.1 ISD91200RI/CRI/PRI/GRI sereies (non ISD91200B)

\Part No Feature	ISD91230PRI	ISD91260CRI	ISD91230RI	ISD91260RI	ISD91230GRI	ISD91260GRI
Flash	64K	128K	64K	128K	64K	128K
SRAM	12K	12K	12K	12K	12K	12K
Data Flash	Configurable	Configurable	Configurable	Configurable	Configurable	Configurable
LDROM	4K	4K	4K	4K	4K	4K
I/O	32	32	32	32	32	32
Timer	2x 32bit + 2x 16 bit	2x 32bit + 2x 16 bit	2x 32bit + 2x 16 bit	2x 32bit + 2x 16 bit	2x 32bit + 2x 16 bit	2x 32bit + 2x 16 bit
UART	2	2	2	2	2	2
SPI	2	2	2	2	2	2
I2C	1	1	1	1	1	1
I2S	1	1	1	1	1	1
PWM	4	4	4	4	4	4
12-Bit ADC	V	V	V	V	V	V
ACMP	2	2	2	2	2	2
Bridge Sense ADC						
Audio ADC		V	V	V		
VR		V				
DMIC		V	V	V		
DPWM driver	V	V	V	V		
PDMA	4	4	4	4	4	4
ISP/ICP	V	V	V	V	V	V
Package	LQFP64	LQFP64	LQFP64	LQFP64	LQFP64	LQFP64

2.1.2 ISD91200B series (Bridge Sense)

\Part No Feature	ISD91230BRI	ISD91260BRI
Flash	64K	128K
SRAM	12K	12K
Data Flash	Configurable	Configurable
LDROM	4K	4K
I/O	32	32
Timer	2x 32bit + 2x 16 bit	2x 32bit + 2x 16 bit
UART	2	2
SPI	2	2
I2C	1	1
I2S	1	1
PWM	4	4
12-Bit ADC	V	V
ACMP	2	2
Bridge Sense ADC	V	V
Audio ADC		
VR		
DMIC	V	V
DPWM driver	V	V
PDMA	4	4
ISP/ICP	V	V
Package	LQFP64	LQFP64

2.1.3 ISD91200YI/CYI sereies (non ISD91200B)

\Part No Feature	ISD91260CYI	ISD91260YI	ISD91230YI
Flash	128K	128K	64K
SRAM	12K	12K	12K
Data Flash	Configurable	Configurable	Configurable
LDROM	4K	4K	4K
I/O	15	15	15
Timer	2x 32bit + 2x 16 bit	2x 32bit + 2x 16 bit	2x 32bit + 2x 16 bit
UART	1	1	1
SPI	1	1	1
I2C	1	1	1
I2S	1	1	1
PWM	2	2	2
12-Bit ADC	V	V	V
ACMP	2	2	2
Bridge Sense ADC			
Audio ADC	V	V	V
VR	V		
DMIC			
DPWM driver	V	V	V
PDMA	4	4	4
ISP/ICP	V	V	V
Package	QFN32	QFN32	QFN32

3 PART INFORMATION AND PIN CONFIGURATION

3.1 Pin Configuration

3.1.1 ISD91200 LQFP 64 pin (Normal & C series)

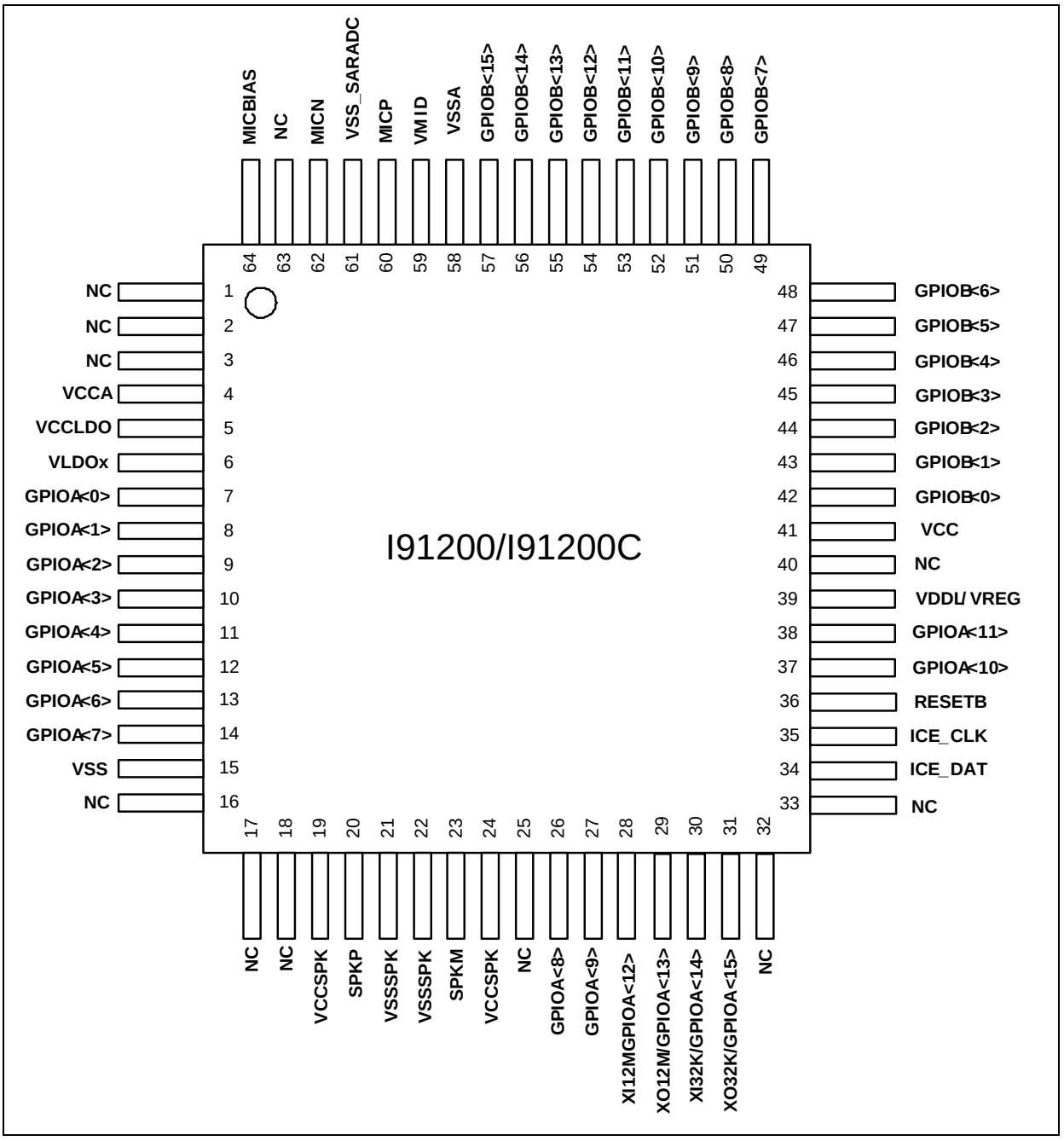

3.1.2 ISD91200 LQFP 64 pin (P series)

Basic feature & play-back only

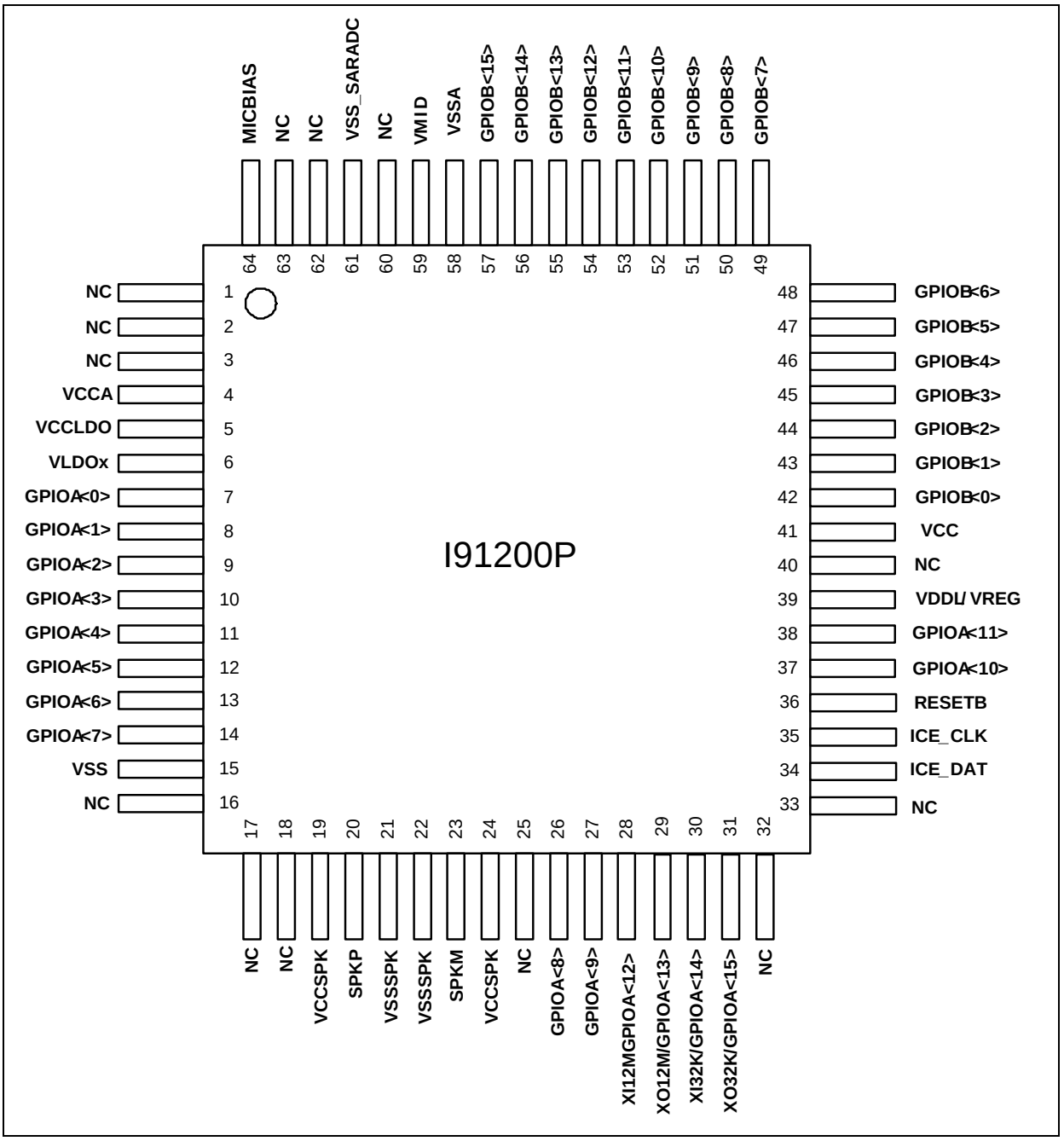

3.1.3 ISD91200 LQFP 64 pin (G series)

Basic feature, no MIC & SPK supported

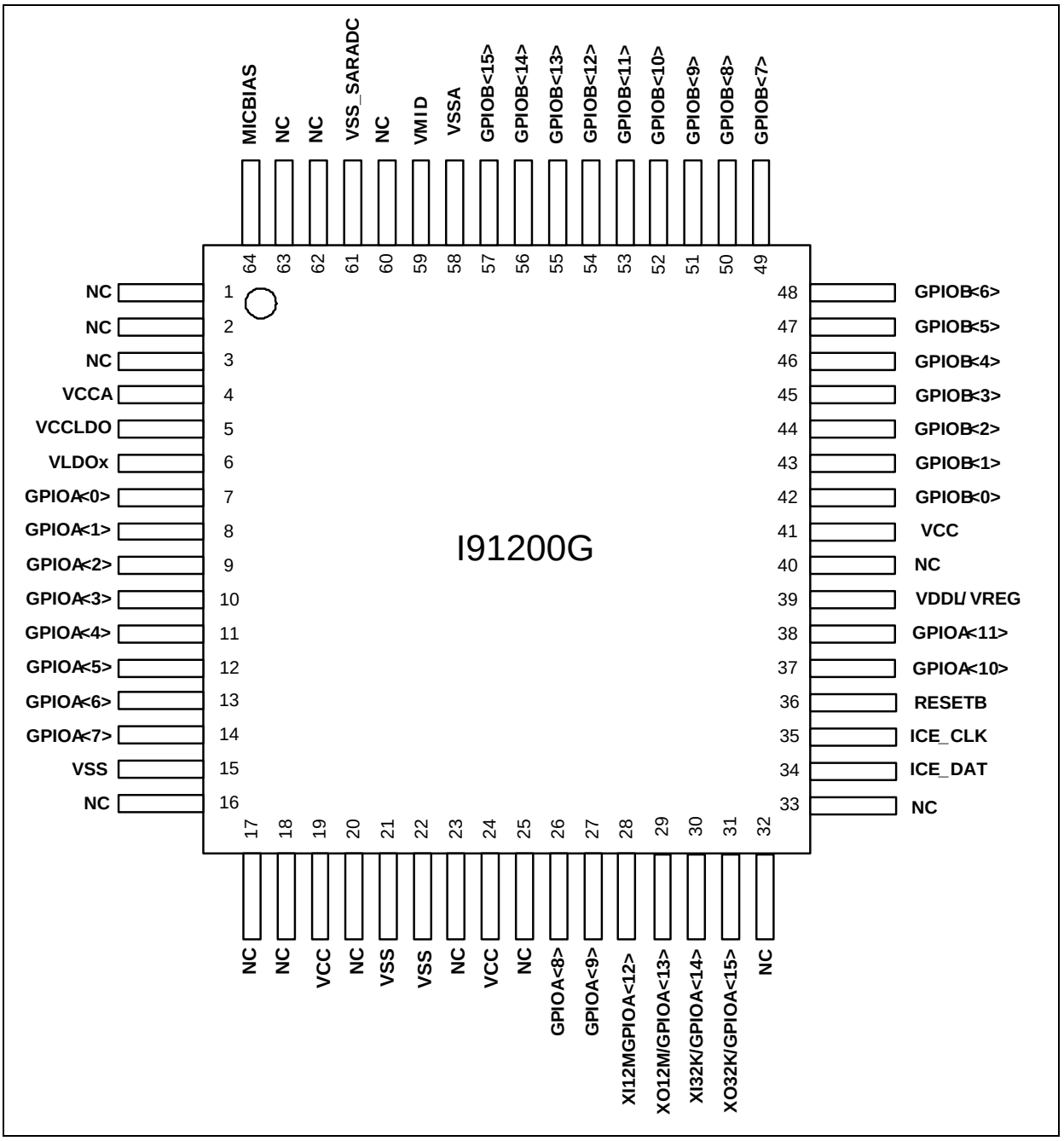

3.1.4 ISD91200 LQFP 64 pin (B series)

No SDADC but bridge sense ADC supported

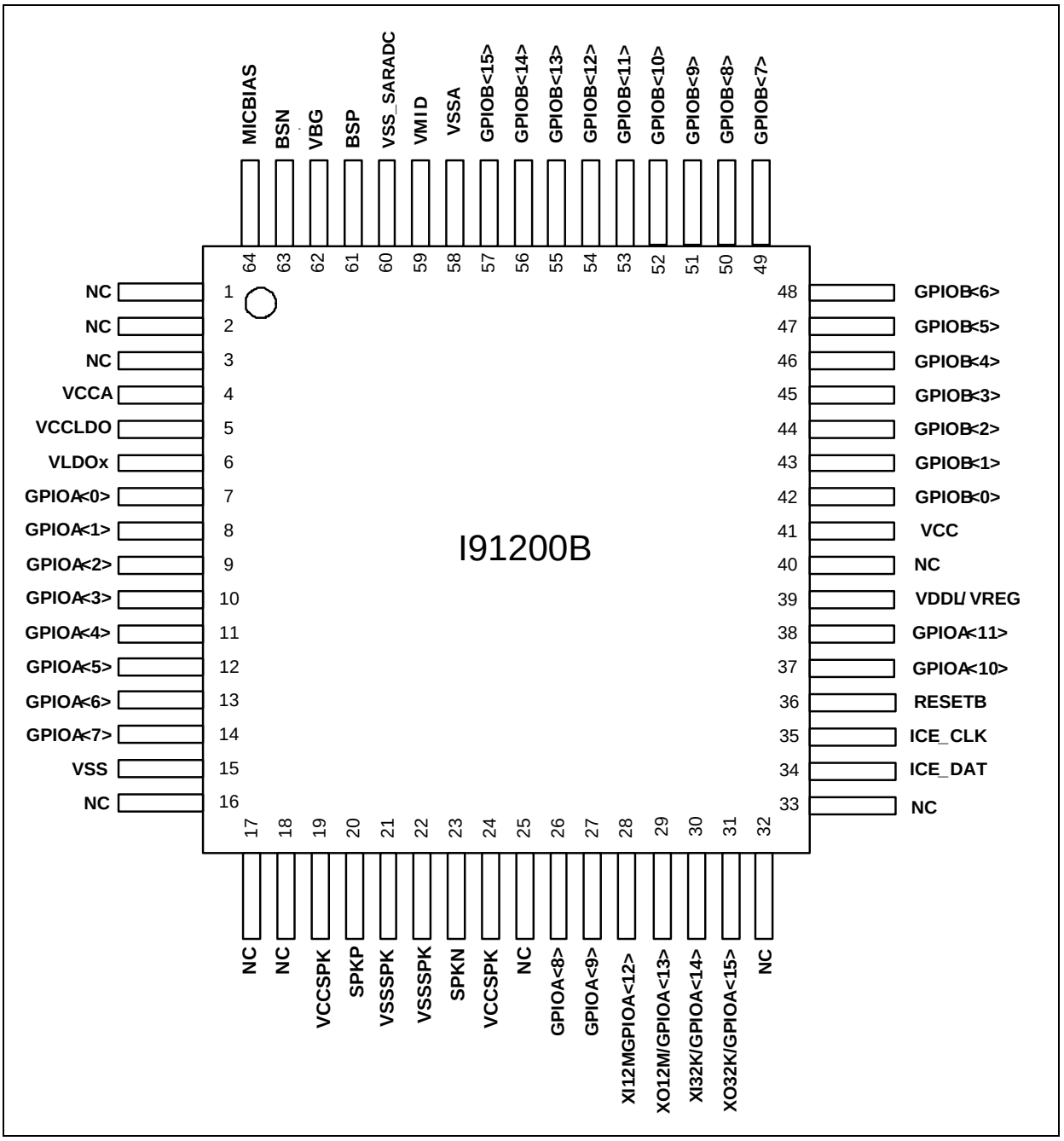

3.1.5 ISD91200 QFN 32 pin (Y series)

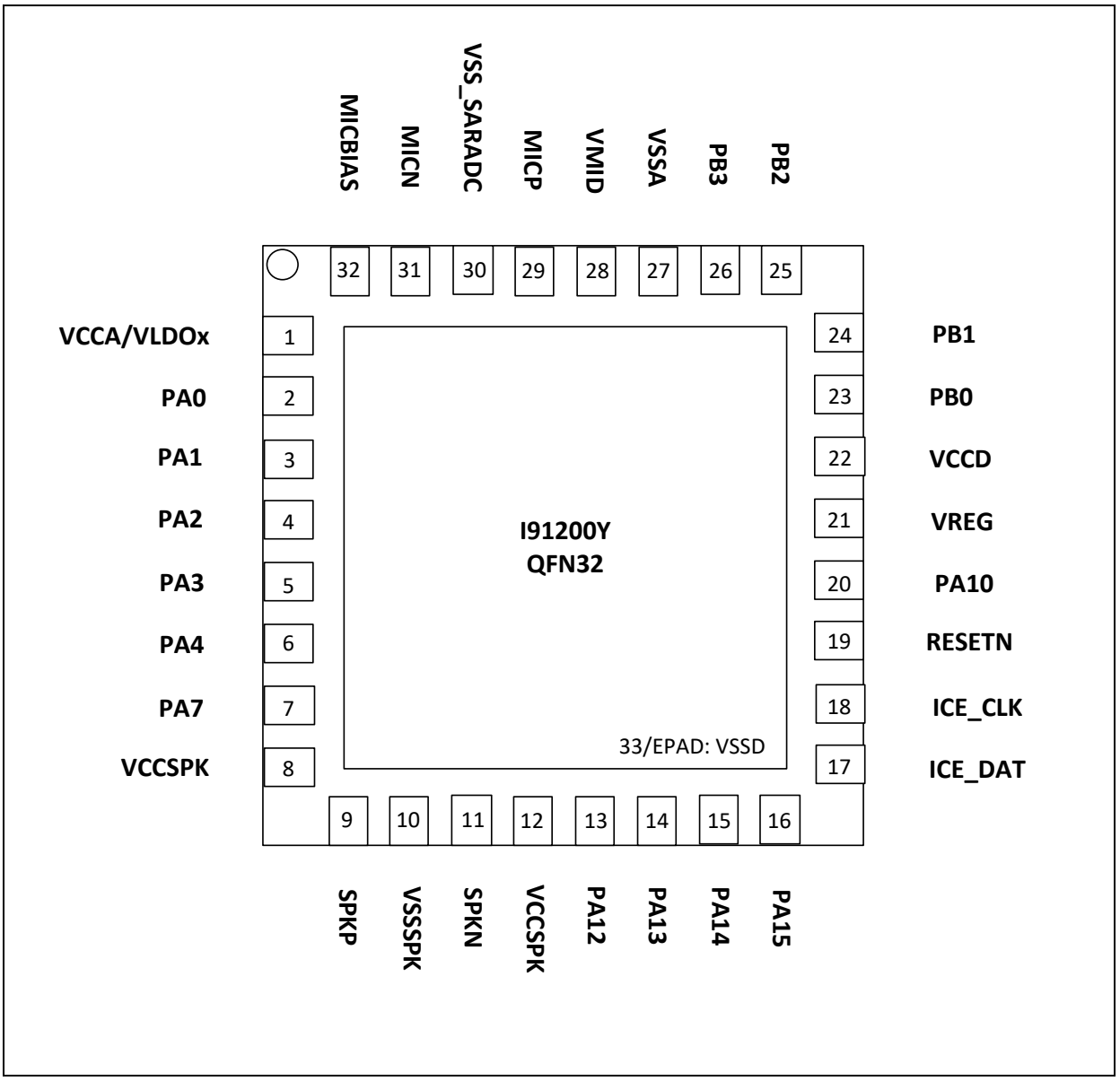

3.2 Pin Description

The ISD91200 is a low pin count device where many pins are configurable to alternative functions. All General Purpose Input/Output (GPIO) pins can be configured to alternate functions as described in the tables below.

3.2.1 ISD91200RI/CRI/PRI/GRI sereies (non ISD91200B)

LQFP64 Pin Name		Pin Type	Alt CFG	Description
1	NC			
2	NC			
3	NC			
4	VCCA	P		Analog power supply.
5	VCCLDO	P		Power supply for LDO, should be connected to VCCD.
6	VLDOx	P		LDO regulator output. if used, a 1μF decoupling capacitor must be placed. If not used then tie to VCCD.
7	PA.0	I/O	0	General purpose input/output pin; Port A, bit 0
	SPI0_MISO1	O	1	2nd Master In, Slave Out for SPI0 interface
	SPI0_SSB1	O	2	Slave Select Bar 1 for SPI0 interface
	I2S0_FS	I/O	3	Frame Sync Clock for I2S interface
8	PA.1	I/O	0	General purpose input/output pin; Port A, bit 1
	SPI0_MOSI0	O	1	1st Master Out, Slave In for SPI0 interface
	I2S0_BCLK	I/O	3	Bit Clock for I2S interface
9	PA.2	I/O	0	General purpose input/output pin; Port A, bit 2
	SPI0_SCLK0	I/O	1	Serial Clock for SPI 0interface
	DMIC_DAT	I	2	DMIC data. Not support for G & P series.
	I2S0_SDI	I	3	Serial Data Input for I2S interface
10	PA.3	I/O	0	General purpose input/output pin; Port A, bit 3
	SPI0_SSB0	O	1	Slave Select Bar 0 for SPI0 interface
	SARADC_TRIG	I	2	SARADC Trigger
	I2S0_SDO	O	3	Serial Data Output for I2S interface
11	PA.4	I/O	0	General purpose input/output pin; Port A, bit 4
	SPI0_MISO0	O	1	Master In, Slave Out channel 0 for SPI interface
	UART0_TX	O	2	Transmit channel of UART 0
	SPI1_MOSI	O	3	Master Out, Slave In for SPI1 interface
12	PA.5	I/O	0	General purpose input/output pin; Port A, bit 5
	SPI0_MOSI1	O	1	2nd Master Out, Slave In for SPI0 interface
	UART0_RX	I	2	Receive channel of UART 0
	SP1_SCLK	I/O	3	Serial Clock for SPI1 interface
13	PA.6	I/O	0	General purpose input/output pin; Port A, bit 6
	UART0_TX	O	1	Transmit channel of UART 0
	I2C0_SDA	I/O	2	Serial Data, I2C interface
	SPI1_SSB	O	3	Slave Select Bar for SPI1 interface
14	PA.7	I/O	0	General purpose input/output pin; Port A, bit 7

LQFP64 Pin Name		Pin Type	Alt CFG	Description
	UART0_RX	I	1	Receive channel of UART 0
	I2C0_SCL	I/O	2	Serial Clock, I2C interface
	SPI1_MISO	I	3	Master In, Slave Out for SPI1 interface
15	VSSD	P		Digital Ground.
16	NC			
17	NC			
18	NC			
19	VCCSPK	P		Power Supply for PWM Speaker Driver. Need VCC connection for G series.
20	SPKP	O		Positive Speaker Driver Output. Not support for G series.
21	VSSSPK	P		Ground for PWM Speaker Driver. Need VSS connection for G series.
22	VSSSPK	P		Ground for PWM Speaker Driver. Need VSS connection for G series.
23	SPKN	O		Negative Speaker Driver Output. Not support for G series.
24	VCCSPK	P		Power Supply for PWM Speaker Driver. Need VCC connection for G series.
25	NC			
26	PA.8	I/O	0	General purpose input/output pin; Port A, bit 8
	I2C0_SDA	I/O	1	Serial Data, I2C interface
	UART1_TX	O	2	Transmit channel of UART 1
	UART0_RTS	O	3	UART 0 Request to Send Output.
27	PA.9	I/O	0	General purpose input/output pin; Port A, bit 9
	I2C0_SCL	I/O	1	Serial Clock, I2C interface
	UART1_RX	I	2	Receive channel of UART 1
	UART0_CTS	I	3	UART 0 Clear to Send Input.
28	I2C0_SDA	I/O	3	Serial Data, I2C interface
	PA.12	I/O	0	General purpose input/output pin; Port A, bit 12
	PWM0CH2	O	1	PWM0CH2 Output.
	XI12M	I	2	12MHz Crystal Oscillator Input. Max Voltage 1.8V
29	PA.13	I/O	0	General purpose input/output pin; Port A, bit 13
	PWM0CH3	O	1	PWM0CH3 Output.
	XO12M	O	2	12MHz Crystal Oscillator Output
	I2C0_SCL	I/O	3	Serial Clock, I2C interface
30	PA.14	I/O	0	General purpose input/output pin; Port A, bit 14
	UART1_TX	O	1	Transmit channel of UART 1
	DMIC_CLK	IO	2	DMIC clock. Not support for G & P series.
	XI32K	I	3	32.768kHz Crystal Oscillator Input. Max Voltage 1.8V
31	PA.15	I/O	0	General purpose input/output pin; Port A, bit 15
	UART1_RX	I	1	Receive channel of UART 1
	MCLK	O	2	Master clock output for synchronizing external device
	XO32K	O	3	32.768kHz Crystal Oscillator Output

LQFP64 Pin Name		Pin Type	Alt CFG	Description
32	NC			
33	NC			
34	ICE_DAT	I/O		Serial Wire Debug port clock pin. Has internal weak pull-up.
35	ICE_CLK	O		Serial Wire Debug port data pin. Has internal weak pull-up.
36	RESETN	I		External reset input. Pull this pin low to reset device to initial state. Has internal weak pull-up.
37	PA.10	I/O	0	General purpose input/output pin; Port A, bit 10
	PWM0CH0	O	1	PWM0CH0 Output.
	TM0	I	2	External input to Timer 0
	DPWM_P	O	3	Audio PWM positive. Not support for G series.
38	PA.11	I/O	0	General purpose input/output pin; Port A, bit 11
	PWM0CH1	O	1	PWM0CH1 Output.
	TM1	I	2	External input to Timer 1
	DPWM_N	O	3	Audio PWM negative. Not support for G series.
39	VREG	P		Logic regulator output decoupling pin. A 1μF capacitor returning to VSSD must be placed on this pin.
40	NC			
41	VCCD	P		Main Digital Supply for Chip. Supplies all IO except analog, Speaker Driver
42	PB.0	I/O	0	General purpose input/output pin, analog capable; Port B, bit 0. Triggers external interrupt 0 (EINT0/IRQ2)
	SPI1_MOSI	O	1	Master Out, Slave In for SPI1 interface
	CS0	AI		Touch scan channel 0
	A0P	AI		Operational Amplifier 0 positive input
43	PB.1	I/O	0	General purpose input/output pin, analog capable; Port B, bit 1. Triggers external interrupt 1 (EINT1/IRQ3)
	SP1_SCLK	I/O	1	Serial Clock for SPI1 interface
	CS1	AI		Touch scan channel 1
	A0N	AI		Operational Amplifier 0 negative input
44	PB.2	I/O	0	General purpose input/output pin, analog capable; Port B, bit 2
	SPI1_SSB	O	1	Slave Select Bar for SPI1 interface
	CS2	AI		Touch scan channel 1
	A0E	AO		Operational Amplifier 0 output
	SAR11	AI		SARADC channel 11
45	PB.3	I/O	0	General purpose input/output pin, analog capable; Port B, bit 3
	SPI1_MISO	I	1	Master In, Slave Out for SPI1 interface
	CS3	AI		Touch scan channel 3
	A1P	AI		Operational Amplifier 1 positive input
46	PB.4	I/O	0	General purpose input/output pin, analog capable; Port B, bit 4
	I2S0_FS	I/O	1	Frame Sync Clock for I2S interface

LQFP64 Pin Name		Pin Type	Alt CFG	Description
	CS4	AI		Touch scan channel 4
	A1N	AO		Operational Amplifier 1 negative input
47	PB.5	I/O	0	General purpose input/output pin, analog capable; Port B, bit 5
	I2S0_BCLK	I/O	1	Bit Clock for I2S interface
	CS5	AI		Touch scan channel 5
	A1E	AO		Operational Amplifier 1 output
	SAR10	AI		SARADC channel 10
48	PB.6	I/O	0	General purpose input/output pin, analog capable; Port B, bit 6
	I2S0_SDI	I	1	Serial Data Input for I2S interface
	CS6	AI		Touch scan channel 6
	CNP	AI		Comparator 1 positive input and comparator 2 negative input
	SAR8	AI		SARADC channel 8
49	PB.7	I/O	0	General purpose input/output pin, analog capable; Port B, bit 7
	I2S0_SDO	O	1	Serial Data Output for I2S interface
	CS7	AI		Touch scan channel 7
	C1N	AI		Comparator 1 negative input
	SAR9	AI		SARADC channel 9
50	PB.8	I/O	0	General purpose input/output pin, analog capable; Port B, bit 8.
	I2C0_SDA	I/O	1	Serial Data, I2C interface
	I2S0_FS	I/O	2	Frame Sync Clock for I2S interface
	UART1_RTS	O	3	UART 1 Request to Send Output.
	CS8	AI		Touch scan channel 8
	C2P	AI		Comparator 2 positive input
	SAR0	AI		SARADC channel 0
51	PB.9	I/O	0	General purpose input/output pin, analog capable; Port B, bit 9.
	I2C0_SCL	I/O	1	Serial Clock, I2C interface
	I2S0_BCLK	I/O	2	Bit Clock for I2S interface
	UART1_CTS	I	3	UART 1 Clear to Send Input.
	CS9	AI		Touch scan channel 9
	SAR1	AI		SARADC channel 1
52	PB.10	I/O	0	General purpose input/output pin, analog capable; Port B, bit 10
	CMP1	O	1	Compare 1 Output
	I2S0_SDI	I	2	Serial Data Input for I2S interface
	UART1_TX	O	3	Transmit channel of UART 1
	CS10	AI		Touch scan channel 10

LQFP64 Pin Name		Pin Type	Alt CFG	Description
	SAR2	AI		SARADC channel 2
53	PB.11	I/O	0	General purpose input/output pin, analog capable; Port B, bit 11
	CMP2	O	1	Compare 2 Output
	I2S0_SDO	O	2	Serial Data Output for I2S interface
	UART1_RX	I	3	Receive channel of UART 1
	CS11	AI		Touch scan channel 11
	SAR3	AI		SARADC channel 3
54	PB.12	I/O	0	General purpose input/output pin, analog capable; Port B, bit 12
	SPI0_MISO0	I/O	1	1st Master In, Slave Out for SPI0 interface
	SPI1_MOSI	I/O	2	Master Out, Slave In for SPI1 interface
	DMIC_DAT	I	3	DMIC data. Not support for G & P series.
	CS12	AI		Touch scan channel 12
	SAR4	AI		SARADC channel 4
55	PB.13	I/O	0	General purpose input/output pin, analog capable; Port B, bit 13
	SPI0_MOSI0	I/O	1	1st Master Out, Slave In for SPI0 interface
	SPI1_SCLK	I/O	2	Serial Clock for SPI1 interface
	SARADC_TRIG	I	3	SARADC Trigger
	CS13	AI		Touch scan channel 13
	SAR5	AI		SARADC channel 5
56	PB.14	I/O	0	General purpose input/output pin, analog capable; Port B, bit 14
	SPI0_SCLK0	I/O	1	1st Serial Clock for SPI0 interface
	SPI1_SSB	O	2	Slave Select Bar 1 for SPI1 interface
	DMIC_CLK	O	3	DMIC clock. Not support for G & P series.
	CS14	AI		Touch scan channel 14
	SAR6	AI		SARADC channel 6
57	PB.15	I/O	0	General purpose input/output pin, analog capable; Port B, bit 15
	SPI0_SSB0	O	1	Slave Select Bar 0 for SPI0 interface
	SPI1_MISO	I/O	2	Master In, Slave Out for SPI1 interface
	MCLK	O	3	Master clock output for synchronizing external device
	CS15	AI		Touch scan channel 15
	SAR7	AI		SARADC channel 7
58	VSSA	AP		Ground for analog circuitry.
59	VMID	O		Mid rail reference. Connect 4.7µF to VSSA.
60	MICP	AI		SDADC positive input. Not support for G & P series.
61	VSS_SARADC	AP		SARADC ground
62	MICN	AI		SDADC negative input. Not support for G & P series.

LQFP64 Pin Name		Pin Type	Alt CFG	Description
63	NC			
64	MICBIAS	O		Microphone bias output. Still need for SARADC in G & P series.

Note:

- Pin Type I=Digital Input, O=Digital Output; AI=Analog Input; AO=Analog Output; P=Power Pin; AP=Analog Power

3.2.2 ISD91200B sereies difference

60	VSS_SARADC	AP		SARADC & BSADC ground
61	BSP	AI		Bridge sense positive input
62	VBG	AP		BS band-gap output.
63	BSN	AI		Bridge sense negative input
64	MICBIAS	AO		BS LDO output

Note:

- Pin Type I=Digital Input, O=Digital Output; AI=Analog Input; AO=Analog Output; P=Power Pin; AP=Analog Power

3.2.3 ISD91200YI/ISD91200CYI (QFN32)

LQFP64 Pin Name		Pin Type	Alt CFG	Description
1	VCCA	P		Analog power supply.
	VLDOx	P		LDO power plane, internal bonded to VCCA. LDO is no used.
2	PA.0	I/O	0	General purpose input/output pin; Port A, bit 0
	SPI0_MISO1	O	1	2nd Master In, Slave Out for SPI0 interface
	SPI0_SSB1	O	2	Slave Select Bar 1 for SPI0 interface
	I2S0_FS	I/O	3	Frame Sync Clock for I2S interface
3	PA.1	I/O	0	General purpose input/output pin; Port A, bit 1
	SPI0_MOSI0	O	1	1st Master Out, Slave In for SPI0 interface
	I2S0_BCLK	I/O	3	Bit Clock for I2S interface
4	PA.2	I/O	0	General purpose input/output pin; Port A, bit 2
	SPI0_SCLK0	I/O	1	Serial Clock for SPI 0interface
	DMIC_DAT	I	2	DMIC data. Not support for G & P series.
	I2S0_SDI	I	3	Serial Data Input for I2S interface
5	PA.3	I/O	0	General purpose input/output pin; Port A, bit 3
	SPI0_SSB0	O	1	Slave Select Bar 0 for SPI0 interface
	SARADC_TRIG	I	2	SARADC Trigger
	I2S0_SDO	O	3	Serial Data Output for I2S interface
6	PA.4	I/O	0	General purpose input/output pin; Port A, bit 4
	SPI0_MISO0	O	1	Master In, Slave Out channel 0 for SPI interface
	UART0_TX	O	2	Transmit channel of UART 0
	SPI1_MOSI	O	3	Master Out, Slave In for SPI1 interface
7	PA.7	I/O	0	General purpose input/output pin; Port A, bit 7
	UART0_RX	I	1	Receive channel of UART 0
	I2C0_SCL	I/O	2	Serial Clock, I2C interface
	SPI1_MISO	I	3	Master In, Slave Out for SPI1 interface
8	VCCSPK	P		Power Supply for PWM Speaker Driver. Need VCC connection for G series.
9	SPKP	O		Positive Speaker Driver Output. Not support for G series.
10	VSSSPK	P		Ground for PWM Speaker Driver. Need VSS connection for G series.
11	SPKN	O		Negative Speaker Driver Output. Not support for G series.
12	VCCSPK	P		Power Supply for PWM Speaker Driver. Need VCC connection for G series.
13	I2C0_SCL	I/O	3	Serial Clock, I2C interface
	PA.12	I/O	0	General purpose input/output pin; Port A, bit 12
	PWM0CH2	O	1	PWM0CH2 Output.
	XI12M	I	2	12MHz Crystal Oscillator Input. Max Voltage 1.8V
14	PA.13	I/O	0	General purpose input/output pin; Port A, bit 13
	PWM0CH3	O	1	PWM0CH3 Output.

LQFP64 Pin Name		Pin Type	Alt CFG	Description
	XO12M	O	2	12MHz Crystal Oscillator Output
	I2C0_SCL	I/O	3	Serial Clock, I2C interface
15	PA.14	I/O	0	General purpose input/output pin; Port A, bit 14
	UART1_TX	O	1	Transmit channel of UART 1
	DMIC_CLK	IO	2	DMIC clock. Not support for G & P series.
	XI32K	I	3	32.768kHz Crystal Oscillator Input. Max Voltage 1.8V
16	PA.15	I/O	0	General purpose input/output pin; Port A, bit 15
	UART1_RX	I	1	Receive channel of UART 1
	MCLK	O	2	Master clock output for synchronizing external device
	XO32K	O	3	32.768kHz Crystal Oscillator Output
17	ICE_DAT	I/O		Serial Wire Debug port clock pin. Has internal weak pull-up.
18	ICE_CLK	O		Serial Wire Debug port data pin. Has internal weak pull-up.
19	RESETN	I		External reset input. Pull this pin low to reset device to initial state. Has internal weak pull-up.
20	PA.10	I/O	0	General purpose input/output pin; Port A, bit 10
	PWM0CH0	O	1	PWM0CH0 Output.
	TM0	I	2	External input to Timer 0
	DPWM_P	O	3	Audio PWM positive. Not support for G series.
21	VREG	P		Logic regulator output decoupling pin. A 1μF capacitor returning to VSSD must be placed on this pin.
22	VCCD	P		Main Digital Supply for Chip. Supplies all IO except analog, Speaker Driver
23	PB.0	I/O	0	General purpose input/output pin, analog capable; Port B, bit 0. Triggers external interrupt 0 (EINT0/IRQ2)
	SPI1_MOSI	O	1	Master Out, Slave In for SPI1 interface
	CS0	AI		Touch scan channel 0
	A0P	AI		Operational Amplifier 0 positive input
24	PB.1	I/O	0	General purpose input/output pin, analog capable; Port B, bit 1. Triggers external interrupt 1 (EINT1/IRQ3)
	SP1_SCLK	I/O	1	Serial Clock for SPI1 interface
	CS1	AI		Touch scan channel 1
	A0N	AI		Operational Amplifier 0 negative input
25	PB.2	I/O	0	General purpose input/output pin, analog capable; Port B, bit 2
	SPI1_SSB	O	1	Slave Select Bar for SPI1 interface
	CS2	AI		Touch scan channel 1
	A0E	AO		Operational Amplifier 0 output
	SAR11	AI		SARADC channel 11
26	PB.3	I/O	0	General purpose input/output pin, analog capable; Port B, bit 3
	SPI1_MISO	I	1	Master In, Slave Out for SPI1 interface
	CS3	AI		Touch scan channel 3

LQFP64 Pin Name		Pin Type	Alt CFG	Description
	A1P	AI		Operational Amplifier 1 positive input
27	VSSA	AP		Ground for analog circuitry.
28	VMID	O		Mid rail reference. Connect 4.7µF to VSSA.
29	MICP	AI		SDADC positive input. Not support for G & P series.
30	VSS_SARADC	AP		SARADC ground
31	MICN	AI		SDADC negative input. Not support for G & P series.
32	MICBIAS	O		Microphone bias output
EPAD	VSSD	P		Digital power ground

Note:

- Pin Type I=Digital Input, O=Digital Output; AI=Analog Input; AO=Analog Output; P=Power Pin; AP=Analog Power
- EPAD is VSSD, different power plane as VSSA

4 BLOCK DIAGRAM

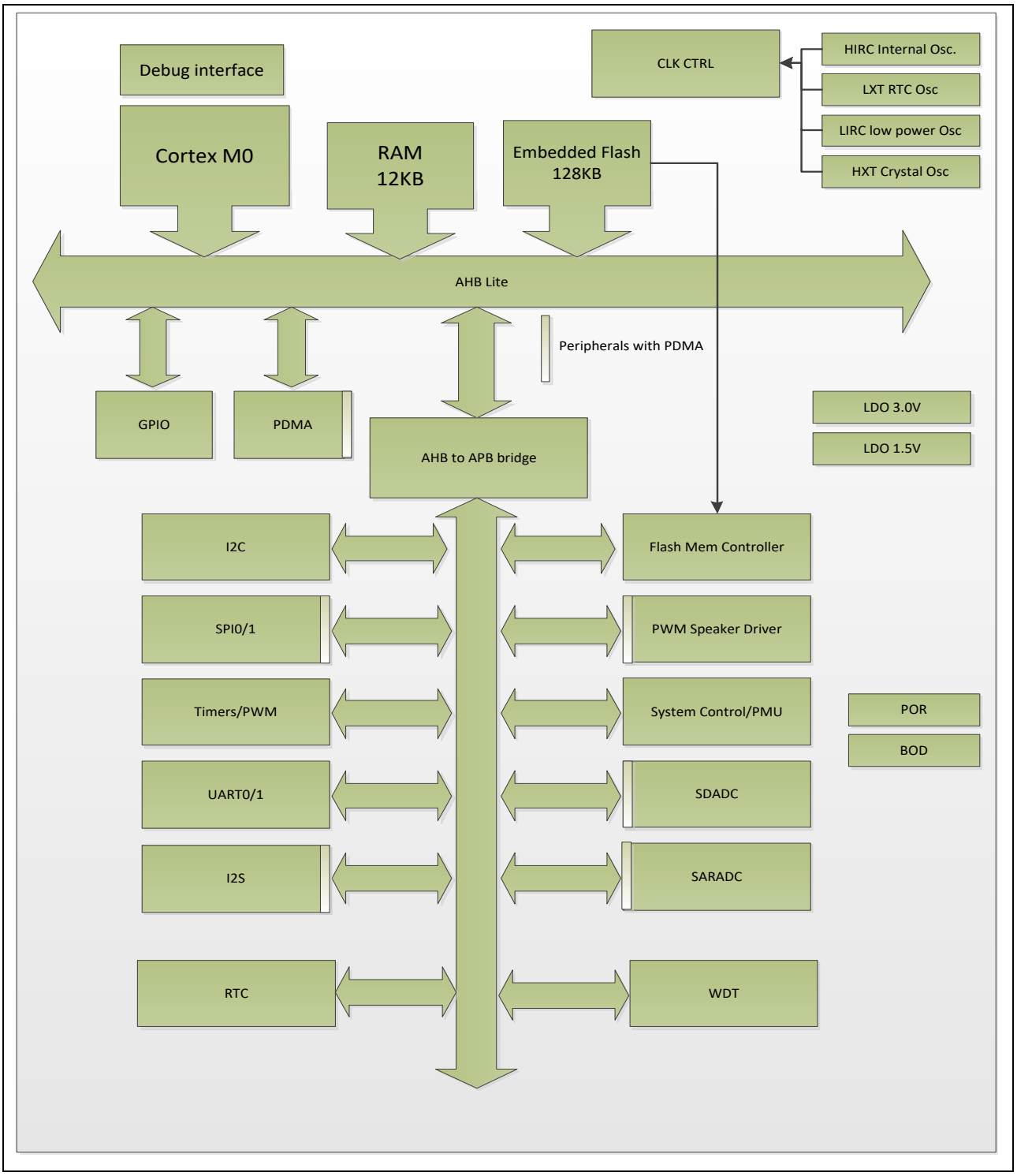

Figure 4-1 ISD91200 Block Diagram

5 APPLICATION CIRCUIT

5.1 ISD91200RI/CRI/PRI/GRI Series (non ISD91200B)

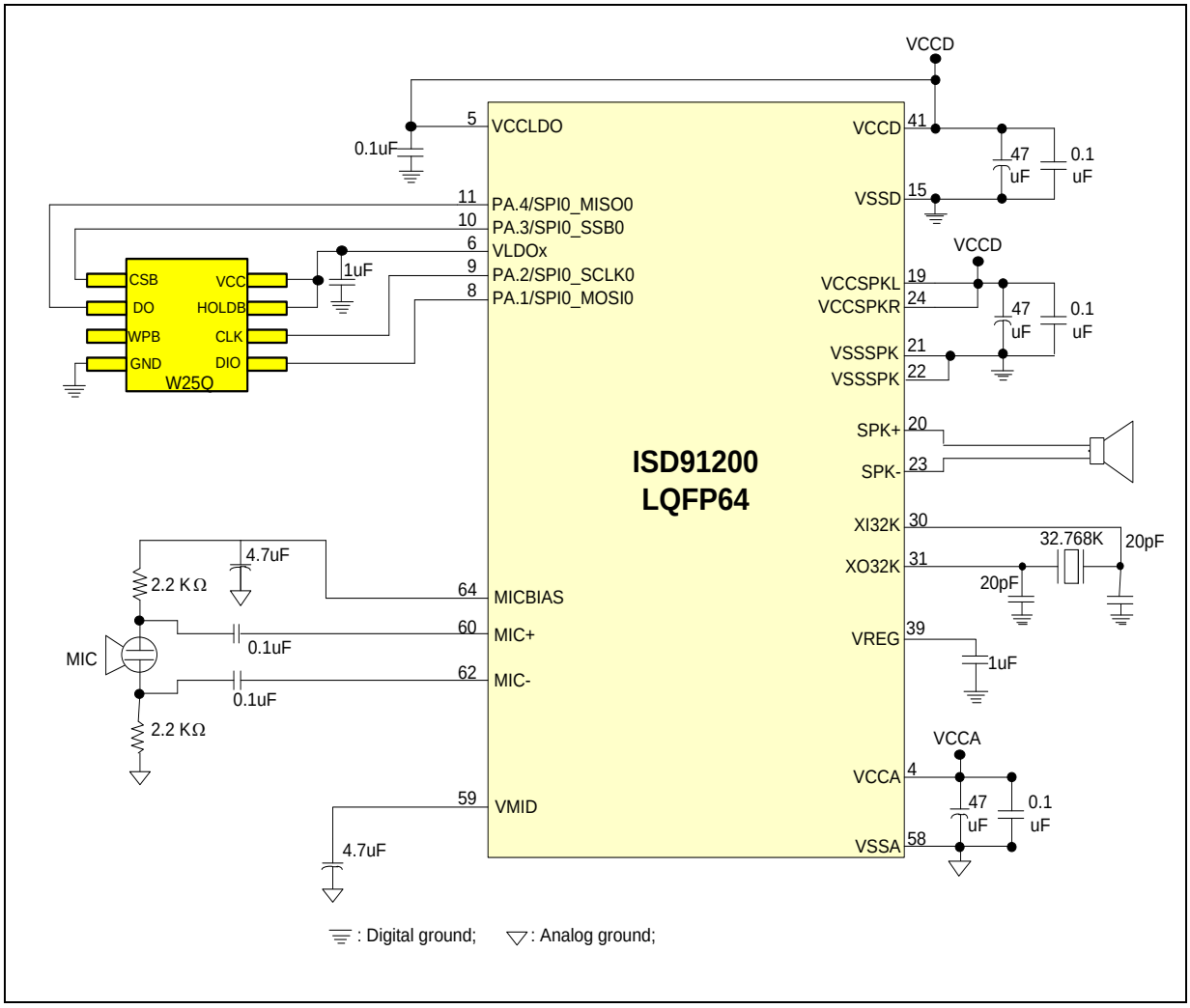

Note:

1. For SPI flash quad mode access, disconnect HOLDB & WPB from VDDB, then connect HOLDB to PA.0 and WPB to PA.5.
2. No MIC function in ISD91200P series
3. No MIC & SPK function in ISD91200G series

5.2 ISD91200B Series

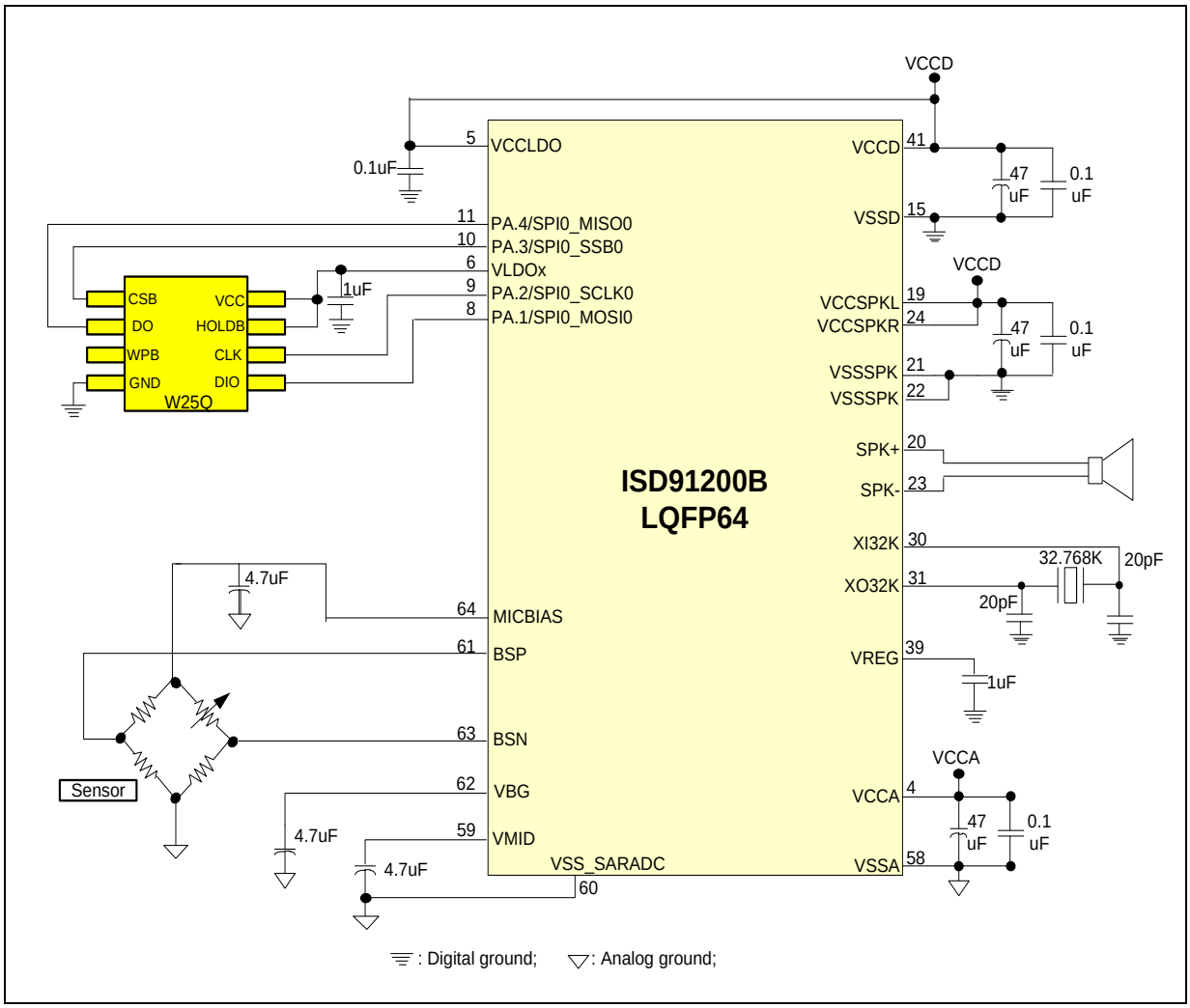

5.3 ISD91200YI/CYI Series (non ISD91200B)

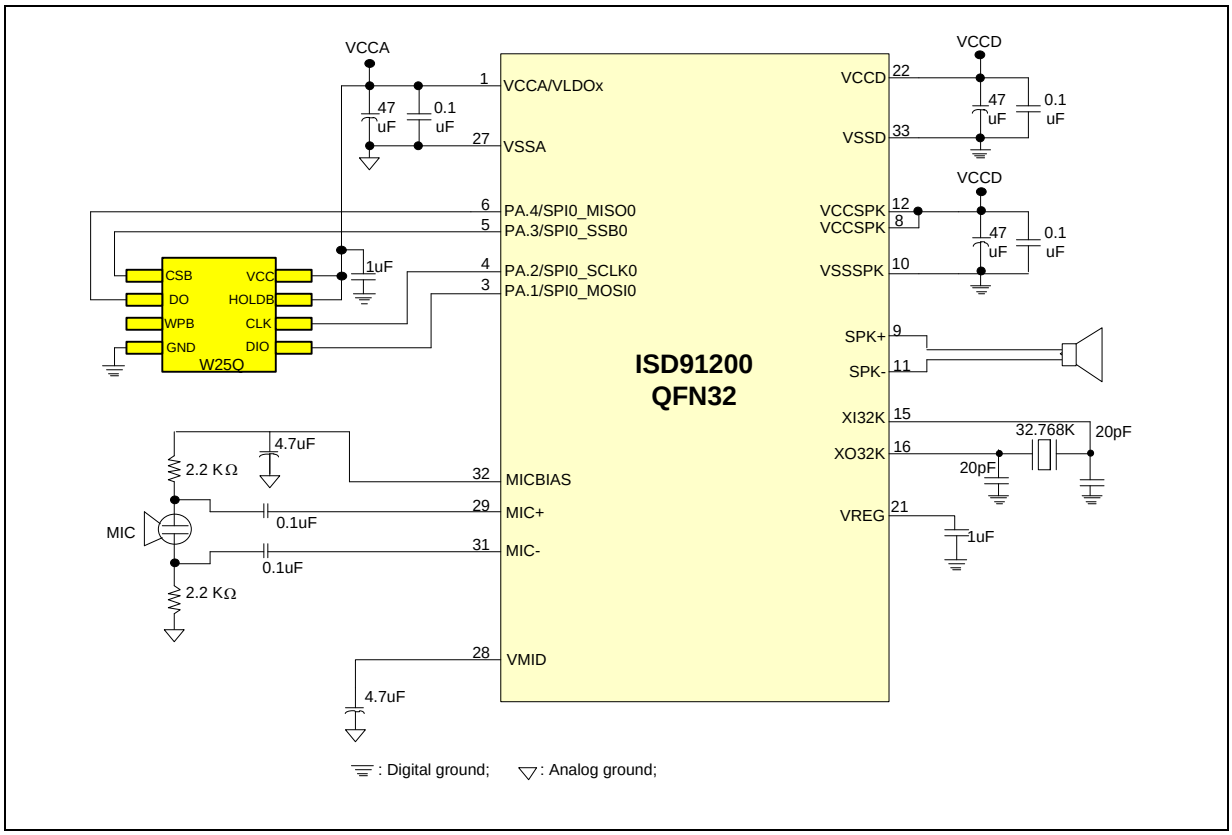

6 ELECTRICAL CHARACTERISTICS

6.1 Absolute Maximum Ratings

SYMBOL	PARAMETER	MIN	MAX	UNIT
DC Power Supply	VDD–VSS	-0.3	+6.0	V
Input Voltage	VIN	VSS-0.3	VDD+0.3	V
Oscillator Frequency	$1/t_{CLCL}$	0	40	MHz
Operating Temperature	TA	-40	+85	°C
Storage Temperature	TST	-55	+150	°C
Maximum Current into V_{DD}		-	120	mA
Maximum Current out of V_{SS}			120	mA
Maximum Current sunk by a I/O pin			35	mA
Maximum Current sourced by a I/O pin			35	mA
Maximum Current sunk by total I/O pins			100	mA
Maximum Current sourced by total I/O pins			100	mA

Note: Exposure to conditions beyond those listed under absolute maximum ratings may adversely affects the lift and reliability of the device.

6.2 DC Electrical Characteristics

(VDD-VSS=3.3V, TA = 25°C, F_{OSC} = 49.152 MHz unless otherwise specified.)

PARAMETER	SYM.	SPECIFICATION				TEST CONDITIONS
		MIN.	TYP.	MAX.	UNIT	
Operation voltage	V_{DD}	1.8		5.5	V	V_{DD} =1.8V ~ 5.5V up to 50 MHz
Power Ground	V_{SS} AV_{SS}	-0.3			V	
LDO Output Voltage	V_{LDO}	-10%	1.5	+10%	V	V_{DD} > 1.8V
Analog Operating Voltage	AV_{DD}	1.8		V_{DD}	V	**Note:** SDADC & SARADC performance start degraded when AVDD <2.4V
Analog Reference Voltage	Vref	0		AV_{DD}	V	
Operating Current Normal Run Mode @ 50Mhz	I_{DD1}		9		mA	V_{DD}= 5.5V@50Mhz, enable all IP, XTAL=12MHz
	I_{DD2}		5		mA	V_{DD}=5.5V@50Mhz, disable all IP, XTAL=12MHz
	I_{DD3}		9		mA	V_{DD} = 3V@50Mhz, enable all IP, XTAL=12MHz
	I_{DD4}		5		mA	V_{DD} = 3V@50Mhz, disable all IP , XTAL=12MHz
Operating Current Normal Run Mode @ 12Mhz	I_{DD5}		3		mA	V_{DD} = 5.5V@12Mhz, enable all IP a, XTAL=12MHz
	I_{DD6}		2		mA	V_{DD} = 5.5V@12Mhz, disable all IP XTAL=12MHz
	I_{DD7}		3		mA	V_{DD} = 3V@12Mhz, enable all IP, XTAL=12MHz
	I_{DD8}		2		mA	V_{DD} = 3V@12Mhz, disable all IP, XTAL=12MHz

Operating Current Normal Run Mode @ 4Mhz	I_{DD9}		1.7		MA	V_{DD} = 5V@4Mhz, Enable All IP, XTAL=4MHz
	I_{DD10}		1.1		mA	V_{DD} = 5V@4Mhz, disable all IP, XTAL=4MHz
	I_{DD11}		1.7		mA	V_{DD} = 3V@4Mhz, enable all IP, XTAL=4MHz
	I_{DD12}		1.1		mA	V_{DD} = 3V@4Mhz, disable all IP, XTAL=4MHz
Operating Current Idle Mode @ 50Mhz	I_{IDLE1}		7		mA	V_{DD}= 5.5V@50Mhz, enable all IP, XTAL=12MHz
	I_{IDLE2}		3		mA	V_{DD}=5.5V@50Mhz, disable all IP, XTAL=12MHz
	I_{IDLE3}		7		mA	V_{DD} = 3V@50Mhz, enable all IP, XTAL=12MHz
	I_{IDLE4}		3		mA	V_{DD} = 3V@50Mhz, disable all IP a XTAL=12MHz
Operating Current Idle Mode @ 12Mhz	I_{IDLE5}		2.5		mA	V_{DD} = 5.5V@12Mhz, enable all IP XTAL=12MHz
	I_{IDLE6}		1.3		mA	V_{DD} = 5.5V@12Mhz, disable all IP XTAL=12MHz
	I_{IDLE7}		2.5		mA	V_{DD} = 3V@12Mhz, enable all IP, XTAL=12MHz
	I_{IDLE8}		1.3		mA	V_{DD} = 3V@12Mhz, disable all IP, XTAL=12MHz
Operating Current Idle Mode @ 4Mhz	I_{IDLE9}		1.6		mA	V_{DD} = 5V@4Mhz, enable all IP XTAL=4MHz
	I_{IDLE10}		1		mA	V_{DD} = 5V@4Mhz, disable all IP XTAL=4MHz
	I_{IDLE11}		1.6		mA	V_{DD} = 3V@4Mhz, enable all IP, XTAL=4MHz
	I_{IDLE12}		1		mA	V_{DD} = 3V@4Mhz, disable all IP, XTAL=4MHz

Supply Current at STOP Mode (special characteristic)	ISTOP		7		μA	XTAL32K ON; RTC OFF; NO LOAD
Supply Current at Standby Power Down Mode	ISPD		4		μA	XTAL32K ON; RTC ON; NO LOAD
Supply Current at Deep Sleep	IDSLP		200		μA	XTAL32K ON; RTC OFF; NO LOAD
Supply Current Sleep Mode	ISLP		3.5		mA	
Supply Current at Deep Power Down Mode	IDPD		2		μA	Wakeup with Wakeup Pin
Input Current PA, PB, (Quasi-bidirectional mode)	I_{IN1}	-75	-	+15	μA	V_{DD} = 5.5V, V_{IN} = 0V or V_{IN}=V_{DD}
Input Current at /RESET [1]	I_{IN2}	-75	-45	-30	μA	V_{DD} = 3.3V, V_{IN} = 0.45V
Input Leakage Current PA, PB,	I_{LK}	-2	-	+2	μA	V_{DD} = 5.5V, 0<V_{IN}<V_{DD}
Logic 1 to 0 Transition Current PA~PB (Quasi-bidirectional mode)	I_{TL} [3]	-650	-	-200	μA	V_{DD} = 5.5V, V_{IN}<2.0V
Input Low Voltage PA, PB (TTL input)	V_{IL1}	-0.3	-	0.8	V	V_{DD} = 4.5V
		-0.3	-	0.6		V_{DD} = 2.5V
Input High Voltage PA, PB (TTL input)	V_{IH1}	2.0	-	V_{DD} +0.2	V	V_{DD} = 5.5V
		1.5	-	V_{DD} +0.2		V_{DD} =3.0V
Input Low Voltage XT1[*2]	V_{IL3}	0	-	0.8	V	V_{DD} = 4.5V
		0	-	0.4		V_{DD} = 3.0V
Input High Voltage XT1[*2]	V_{IH3}	3.5	-	V_{DD} +0.2	V	V_{DD} = 5.5V
		2.4	-	V_{DD} +0.2		V_{DD} = 3.0V
Input Low Voltage X32I[*2]	V_{IL4}	0	-	0.4	V	
Input High Voltage X32I[*2]	V_{IH4}	1.7		2.5	V	
Negative going threshold (Schmitt input), /REST	V_{ILS}	-0.5	-	0.3V_{DD}	V	
Positive going threshold (Schmitt input), /REST	V_{IHS}	0.7V_{DD}	-	V_{DD}+0.5	V	
Hysteresis voltage of PA~PB(Schmitt input)	V_{HY}		0.2V_{DD}		V	

Source Current PA, PB, Quasi-Bidirectional Mode)	I_{SR11}	-300	-370	-450	μA	V_{DD} = 4.5V, V_S = 2.4V
	I_{SR12}	-50	-70	-90	μA	V_{DD} = 2.7V, V_S = 2.2V
	I_{SR12}	-40	-60	-80	μA	V_{DD} = 2.5V, V_S = 2.0V
Source Current PA, PB (Push-pull Mode)	I_{SR21}	-20	-24	-28	mA	V_{DD} = 4.5V, V_S = 2.4V
	I_{SR22}	-4	-6	-8	mA	V_{DD} = 2.7V, V_S = 2.2V
	I_{SR22}	-3	-5	-7	mA	V_{DD} = 2.5V, V_S = 2.0V
Sink Current PA, PB (Quasi-bidirectional and Push-pull Mode)	I_{SK1}	10	16	20	mA	V_{DD} = 4.5V, V_S = 0.45V
	I_{SK1}	7	10	13	mA	V_{DD} = 2.7V, V_S = 0.45V
	I_{SK1}	6	9	12	mA	V_{DD} = 2.5V, V_S = 0.45V
Brownout voltage with BOV_VL [1:0] =00b	$V_{BO2.2}$	2.1	2.2	2.3	V	
Brownout voltage with BOV_VL [1:0] =01b	$V_{BO2.7}$	2.6	2.7	2.8	V	
Brownout voltage with BOV_VL [1:0] =10b	$V_{BO3.8}$	3.7	3.8	3.9	V	
Brownout voltage with BOV_VL [1:0] =11b	$V_{BO4.5}$	4.4	4.5	4.6	V	
Hysteresis range of BOD voltage	V_{BH}	30	-	150	mV	V_{DD} = 2.5V~5.5V

Notes:

1. /REST pin is a Schmitt trigger input.
2. Crystal Input is a CMOS input.
3. Pins of P0, P1, P2, P3 and P4 can source a transition current when they are being externally driven from 1 to 0. In the condition of V_{DD}=5.5V, 5he transition current reaches its maximum value when Vin approximates to 2V.

6.3 AC Electrical Characteristics

6.3.1 External 32kHz XTAL Oscillator

PARAMETER	CONDITION	MIN.	TYP.	MAX.	UNIT
Input clock frequency	External crystal	-	32.768	-	kHz
Temperature	-	-40	-	85	℃
V_{DD}	-	2.4	-	5.5	V

6.3.2 Internal 49.152MHz Oscillator

PARAMETER	CONDITION	MIN.	TYP.	MAX.	UNIT
Supply voltage	-	1.8	-	5.5	V
Center Frequency	-	-	49.152		MHz
Calibrated Internal Oscillator Frequency	+25°C ; VDD =3V	-0.5	-	0.5	%
	-40°C ~+85°C; VDD=2.4V~5.5V	-2.0	-	1.0	%

6.3.3 Internal 10 kHz Oscillator

PARAMETER	CONDITION	MIN.	TYP.	MAX.	UNIT
Supply voltage	-	1.8	-	5.5	V
Center Frequency	-	-	10	-	kHz
Calibrated Internal Oscillator Frequency	+25°C ; VDD =3V	-10	-	10	%
	-40°C ~+85°C; VDD=2.4V~5.5V	-20	-	20	%

6.3.4 External 12MHz XTAL Oscillator

PARAMETER	CONDITION	MIN.	TYP.	MAX.	UNIT
Input clock frequency	External crystal	-	12	-	MHz
Temperature	-	-40	-	85	℃
V_{DD}	-	1.8	-	5.5	V

6.3.5 Reset Characteristics

(VCCD-VSSD=5V, TA = 25°C, F_{OSC} = 49.152 MHz unless otherwise specified.)

Parameter No.	Parameter	Parameter Name	Min	Typ	Max	Unit
V1	V_{TH}	Power Reset threshold		1.5		V
T1	$T_{VDDRISE}$	Supply voltage (VCCD) rise time to power on reset level	0.02-	-	100	ms

T2	T_{IRSWR}	First instruction execution in main*1 after software initiates the system reset	-	26	40	μs
T3	T_{RSWD}	nRESET pin low duration	100			μs
T4	T_{IRSPIN}	First instruction execution in main*1 after nRESET pin reset	-	50	80	μs

Notes:

*1 The first instruction execution in main is based on Nuvoton BSP.

Power-On Reset Timing

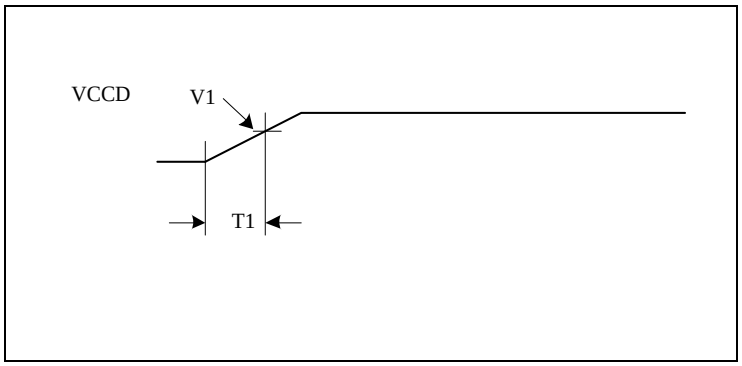

Software Reset Timing

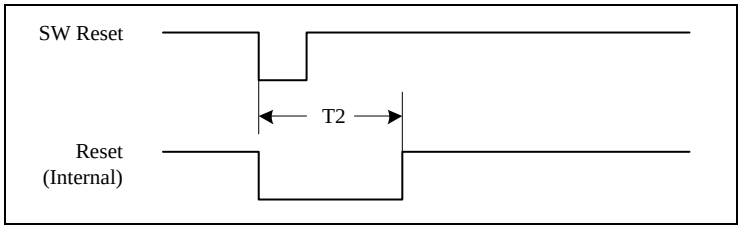

Pin Reset Timing

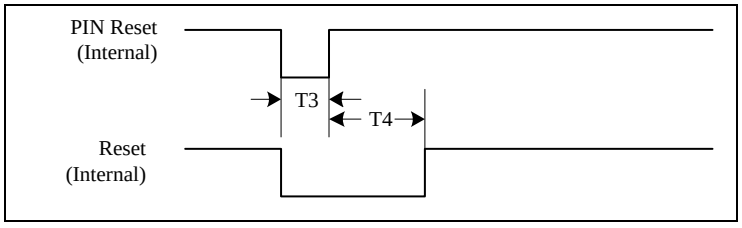

6.4 Analog Characteristics

6.4.1 ADC and Speaker Driver

Conditions: VCCD = 3.3V, VCCA = 3.3V, T_A = +25°C, 1kHz signal, fs = 48kHz, 16-bit audio data, unless otherwise stated.

Parameter	Symbol	Comments/Conditions	Min	Typ	Max	Units
Analog to Digital Converter (SDADC)						
Full scale input signal	V_{INFS}	PGAGAIN = 0dB		0.85 -1.41		Vrms dBV
Signal-to-noise ratio	SNR	Gain = 0dB, A-weighted	tbd	95		dB
Total harmonic distortion	THD+N	Input = -3dB FS input		-85	tbd	dB
PWM Speaker Output (8Ω bridge-tied-load)						
Full scale output			VCCSPK / 3.3			V_{rms}
Total harmonic distortion	THD+N	P_o= 200mW, VDDSPK=3.3V		53		dB
		P_o= 320mW, VDDSPK = 3.3V				dB
		P_o= 500mW, VDDSPK = 5V		-56		dB
		P_o= 1000mW, VDDSPK = 5V				dB
Signal-to-noise ratio	SNR	VDDSPK = 3.3V		80		dB
		VDDSPK=5V		80		dB
Power supply rejection ratio (50Hz - 22kHz)	PSRR	VDDSPK = 3.3V		70		dB
		VDDSPK = 5V		72		dB

6.4.2 PGA

Conditions: VCCD = 3.3V, VCCA = 3.3V, V_{ldo}=1.5V T_A = +25°C, 1kHz signal, fs = 48kHz, 16-bit audio data, unless otherwise stated.

Parameter	Symbol	Comments/Conditions	Min	Typ	Max	Units
Microphone Inputs (MICP, MICN) and Programmable Gain Amplifier (PGA)						
Full scale input signal [1]		PGAGAIN = 0dB		0.85 -1.41		Vrms dBV
Programmable gain		Low impedance mode High impedance mode		0 6	6 12	dB dB
Programmable gain step size		Guaranteed Monotonic		6		dB
Mute Attenuation				120		dB
Input resistance, each input pin		Low impedance mode		12		kΩ

Parameter	Symbol	Comments/Conditions	Min	Typ	Max	Units
		High impedance mode		500		kΩ
Input capacitance				10		pF
PGA equivalent input noise		0 to 20kHz, 0dB gain, low impedance mode		8.5		µVrms

6.4.3 ALC and MICBIAS

Conditions: VCCD = 3.3V, VCCA = 3.3V, T_A = +25°C, 1kHz signal, fs = 10kHz, 16-bit audio data, unless otherwise stated.

Parameter	Symbol	Comments/Conditions	Min	Typ	Max	Units
Automatic Level Control (ALC) & Limiter:						
Target record level			-22.5		-1.5	dBFS
Programmable gain			-12		35.25	dB
Gain hold time [3]	t_{HOLD}	Doubles every gain step, with 16 steps total	0 / 2.67 / 5.33 / … / 43691			ms
Gain ramp-up (decay) [3]	t_{DCY}	ALC Mode ALC = 0	4 / 8 / 16 / … / 4096			ms
		Limiter Mode ALC = 1	1 / 2 / 4 / … / 1024			ms
Gain ramp-down (attack) [3]	t_{ATK}	ALC Mode ALC = 0	1 / 2 / 4 / … / 1024			ms
		Limiter Mode ALC = 1	0.25 / 0.5 / 1 / … / 128			ms
Mute Attenuation				120		dB
Microphone Bias						
Mic Bias voltage	$V_{MICBIAS}$	Gain settings	1, 1.2, 1.3, 1.4, 1.5, 1.6, 1.7, 1.8,			V_{ldo}
		Output voltage	1.5, 1.8, 1.95, 2.1, 2.25, 2.4, 2.55, 2.7			V
Maximum output current	$I_{MICBIAS}$				3	mA
Output noise voltage	V_n	1kHz to 20kHz		46		nV/√Hz

Notes

1. Full Scale is relative to the magnitude of V_{ldo}.
2. Distortion is measured in the standard way as the combined quantity of distortion products plus noise. The signal level for distortion measurements is at 3dB below full scale, unless otherwise noted.
3. Time values scale proportionally with HCLK. Complete descriptions and definitions for these values are contained in the detailed descriptions of the ALC functionality.

6.4.4 LDO and Power Management

PARAMETER	MIN	TYP	MAX	UNIT	NOTE
Input Voltage	1.8	5	5.5	V	V_{DD} input voltage
Output Voltage (bypass=0)	-10%	1.5	+10%	V	V_{DD} > 1.8V
Temperature	-40	25	85	°C	
Quiescent Current (PD=0, bypass=0)	-	100	-	uA	
Quiescent Current (PD=1, bypass=0)	-	5	-	uA	
Iload (PD=0)	-	-	100	mA	
Iload (PD=1)	-	-	100	uA	
Cbp	-	1u	-	F	Resr=1ohm
Cload	-	250p	-	F	

Note:

1. It is recommended that a 10uF or higher capacitor and a 100nF bypass capacitor are connected between VCCD and the VSSD pin of the device.
2. To ensure regulator stability, a 1.0uF capacitor must be connected between LDO pin and the VSSD pin of the device. Also a 100nF bypass capacitor between LDO and VSSD will help suppress output noise.

6.4.5 Brownout Detector

PARAMETER	CONDITION	MIN.	TYP.	MAX.	UNIT
Operation voltage	-	1.8	-	5.5	V
Quiescent current	AVDD=5.5V	-	-	125	μA
Temperature	-	-40	25	85	℃
Brown-out voltage	BOV_VL[3:0]=1111		4.6		V
	BOV_VL [3:0]=1110		4.2		V
	BOV_VL [3:0]=1101		3.9		V
	BOV_VL [3:0]=1100		3.7		V
	BOV_VL [3:0]=1011		3.6		V
	BOV_VL [3:0]=1010		3.4		V
	BOV_VL [3:0]=1001		3.1		V
	BOV_VL [3:0]=1000		3.0		V
	BOV_VL [3:0]=0111		2.8		V
	BOV_VL [3:0]=0110		2.6		V

	BOV_VL [3:0]=0101		2.4		V
	BOV_VL [3:0]=0100		2.2		V
	BOV_VL [3:0]=0011		2.1		V
	BOV_VL [2:0]=0010		2.0		V
	BOV_VL [3:0]=0001		1.9		V
	BOV_VL [2:0]=0000		1.8		V
Hysteresis	-	40		130	mV

6.4.6 Power-On Reset (VCCD)

PARAMETER	CONDITION	MIN.	TYP.	MAX.	UNIT
Temperature	-	-40	25	85	℃
Reset Release voltage	VCC ramping up		1.5		V
Quiescent current	Vin>reset voltage	-	60	-	nA

6.4.7 Comparator(for capsense)

PARAMETER	MIN.	TYP.	MAX.	Condition
Temperature	-40℃	25 ℃	85℃	-
VCCA	1.8	3	5.5	-
VCCA current	-	20uA	40uA	20uA@VDD=3V
Input offset voltage	-	5mV	15mV	-
Input common mode range	0.1	-	VDD-1.2	-
DC gain	-	70dB	-	-
Propagation delay	-	200ns	-	@VCM=1.2V & VDIFF=0.1V
Comparison voltage	10mV	20mV	-	20mV@VCM=1V 50mV@VCM=0.1V 50mV@VCM=VDD-1.2 @10mV for non-hysteresis
Hysteresis	-	±10mV	-	One bit control W/O & W. hysteresis @VCM=0.4V ~ VDD-1.2V
Wake up time	-	-	2us	@CINP=1.3V CINN=1.2V

6.4.8 OP Amplifier

Conditions: VCCD = 5.0V, VCCA = 5.0V, T_A = +25°C,

Parameter	Symbol	Comments/Conditions		Min	Typ	Max	Units
D.C. Characteristic							
Operating voltage	Vdd	-	-	1.8	-	5.5	V
Quiescent current	Idd	5V	No load, A0OEN/A1OEN fixed to 0	-	200	350	uA
Input offset voltage	Vopos	5V	-	-2	-	+2	mV
Input offset current	Iopos	-	VDD=5V, VCM=1/2VDD, Ta=-40~85C	-	10	-	nA
Common Mode Voltage Range	Vcm	-	-	Vss	-	Vdd-1.4	V
Power Supply Rejection Ratio	PSRR	-	-	58	80	-	dB
Common Mode Rejection Ratio	CMRR	-	VDD=5V, VCM=0~VDD-1.4V	58	80	-	dB
A.C. Characteristic							
Open Loop Gain	Aol	-	-	60	80	-	dB
Slew Rate+, Rate	SR	-	No load	-	0.1	-	V/us
Gain Band Width	GBW	-	RL=1MΩ, CL=100pF	1		-	MHz

6.4.9 Comparator(for OP)

PARAMETER	MIN.	TYP.	MAX.	Condition
Temperature	-40℃	25 ℃	85℃	-
VCCA	1.8	3	5.5	-
VCCA current	-	20uA	40uA	20uA@VDD=3V
Comparator 1 Input offset voltage		10mV		-
Comparator 2 Input offset voltage		4mV		-
Input common mode range	0.1	-	VDD-1.2	-
DC gain	-	80dB	-	-
Propagation delay	-	200ns	-	@VCM=1.2V & VDIFF=0.1V
Comparison voltage	10mV	20mV	-	20mV@VCM=1V 50mV@VCM=0.1V 50mV@VCM=VDD-1.2 @10mV for non-hysteresis
Hysteresis	-	±10mV	-	One bit control W/O & W. hysteresis @VCM=0.4V ~ VDD-1.2V
Wake up time	-	-	2us	@CINP=1.3V CINN=1.2V

6.4.10 SARADC

Conditions: VCCD = 5.0V, VCCA = 5.0V, T_A = +25°C,

Parameter	Symbol	Comments/Conditions		Min	Typ	Max	Units
Resolution		3V				12	Bit
Differential nonlinearity error	DNL	3V		-	-1 ~ 2	-1 ~ 4	LSB
Integral nonlinearity error	INL	3V		-	2	4	LSB
Offset error	EO	3V		-	1	10	LSB
Gain error (Transfer gain)	EG	3V		-	1	1.005	-
Monotonic	-	3V		-	-	-	-
SARADC clock frequency (AVDD = 5V/3V)	Fadc	3V		-	-	10	Mhz
Sample rate	Fs	3V		-	-	700	KSPS
Supply voltage	Vdda	3V		1.8	-	5.5	V
Supply current (Avg.)	Idd	3V		-	0.5		mA

Parameter	Symbol	Comments/Conditions		Min	Typ	Max	Units
	Idda	3V		-	0.5		mA
Reference voltage	Vref	3V		3	-	Vdda	V
Reference current (Avg.)	Iref			-	0.5		mA
Input voltage	Vin			0	-	Vref	V

7 PACKAGE DIMENSIONS

7.1 LQFP 64L (7x7x1.4mm footprint 2.0mm)

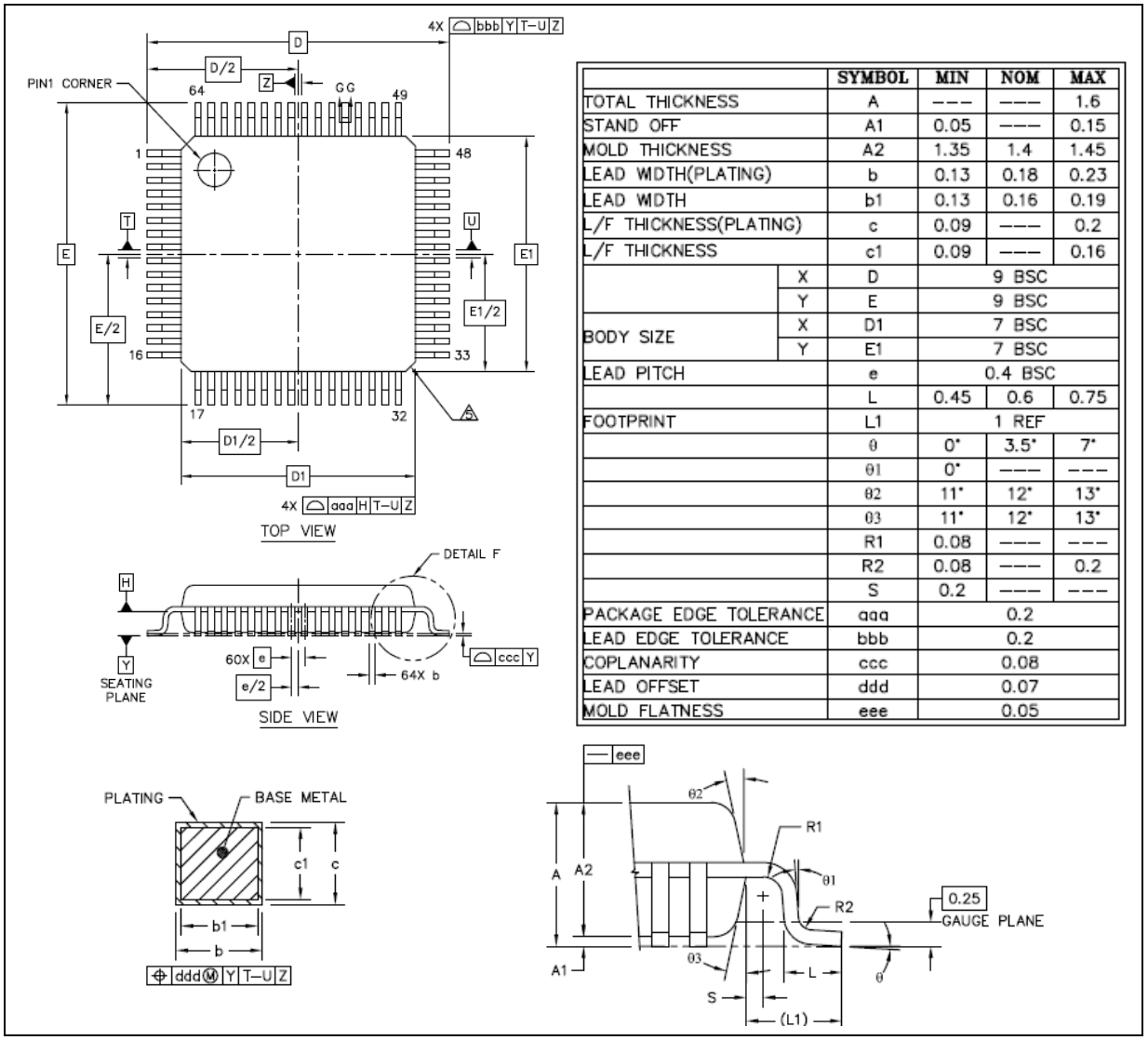

		SYMBOL	MIN	NOM	MAX
TOTAL THICKNESS		A	---	---	1.6
STAND OFF		A1	0.05	---	0.15
MOLD THICKNESS		A2	1.35	1.4	1.45
LEAD WIDTH(PLATING)		b	0.13	0.18	0.23
LEAD WIDTH		b1	0.13	0.16	0.19
L/F THICKNESS(PLATING)		c	0.09	---	0.2
L/F THICKNESS		c1	0.09	---	0.16
BODY SIZE	X	D	9 BSC		
	Y	E	9 BSC		
	X	D1	7 BSC		
	Y	E1	7 BSC		
LEAD PITCH		e	0.4 BSC		
		L	0.45	0.6	0.75
FOOTPRINT		L1	1 REF		
		θ	0°	3.5°	7°
		θ1	0°	---	---
		θ2	11°	12°	13°
		θ3	11°	12°	13°
		R1	0.08	---	---
		R2	0.08	---	0.2
		S	0.2	---	---
PACKAGE EDGE TOLERANCE		aaa	0.2		
LEAD EDGE TOLERANCE		bbb	0.2		
COPLANARITY		ccc	0.08		
LEAD OFFSET		ddd	0.07		
MOLD FLATNESS		eee	0.05		

7.2 QFN 32L 4X4 mm2, Thickness: 0.8mm (Max), Pitch: 0.40mm

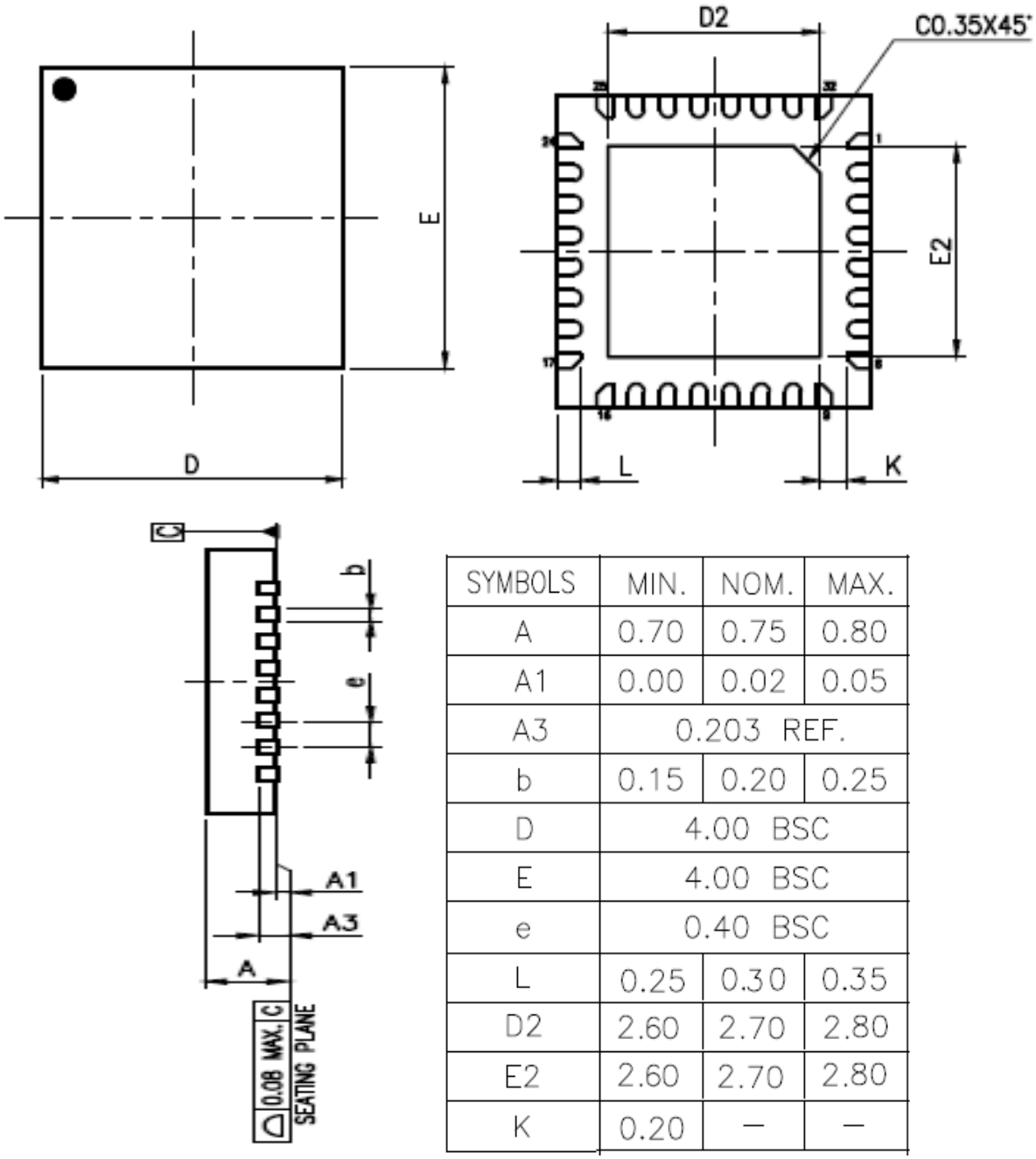

SYMBOLS	MIN.	NOM.	MAX.
A	0.70	0.75	0.80
A1	0.00	0.02	0.05
A3	0.203 REF.		
b	0.15	0.20	0.25
D	4.00 BSC		
E	4.00 BSC		
e	0.40 BSC		
L	0.25	0.30	0.35
D2	2.60	2.70	2.80
E2	2.60	2.70	2.80
K	0.20	—	—

8 ORDERING INFORMATION

I9 1 x x x x x x

ISD Audio Product Family

Product Series

1: Cortex-M0

Family ID

2: Family Series ID

Flash ROM

3: 64KB
6: 128KB

SRAM

0: 12KB

Temperature

I: -40°C ~ +85°C

Package

R: LQFP-64
Y: QFN-32

Feature

Blank: Standard
C: Voice Recognition
P: SARADC, playback-only
G: Basic feature set
B: Bridge Sense

9 REVISION HISTORY

VERSION	DATE	DESCRIPTION	NOTE
V0.12	Aug 24, 2017	- Preliminary Release.	
V0.13	Oct 25, 2017	- Some DC current change. Add SARADC characteristic	
V0.14	Dec 19,2017	- Add analog pin function in pin description section - Add part for ordering information - Add pin diagram for P & G series	
V0.15	Feb. 13, 2018	- Modify ADC maximum SPS to 700K - Add Selection Guide	
V0.16	Mar. 14, 2018	- Modify ADC maximum SPS to 700K in future - Add note for ADC performance degrade when power <2.4V	
V0.17	Apr. 13, 2018	- Modify SARADC up to 12 channels in Features - Add ISD91200B series	
V0.18	July. 3, 2018	- Add 21 bit precision in Bridge Sense feature - Add ISD91200B in Order Information	
V1.0	Sep. 4, 2018	- Add QFN32 related	
V1.1	Oct. 29, 2018	- Modify QFN32 IO quantity to 15 in selection guide	
V1.2	Mar. 19, 2019	- Revise PA12 share pin function from I2C SCL to I2C SDA	
V1.3	Sep. 16, 2019	- Changed cover title - Changed content of I91200 to ISD91200	
V1.4	Mar. 19, 2020	- Modify pin 19~24 in I91200B Pin Configuration for speaker function	
V1.5	May, 22, 2020	- Revise QFN32 package dimension	
V1.6	Aug. 27, 2020	- Add Power Reset Characteristic	
V1.7	Dec. 03, 2020	- Revise the normal operation, idle, standby, sleep mode operation current.	
V1.8	Feb. 24, 2023	- Added “Package is Halogen-free, RoHS-compliant and TSCA-compliant” in section 2. - Updated format	

Important Notice

Nuvoton products are not designed, intended, authorized or warranted for use as components in systems or equipment intended for surgical implantation, atomic energy control instruments, airplane or spaceship instruments, transportation instruments, traffic signal instruments, combustion control instruments, or for other applications intended to support or sustain life. Furthermore, Nuvoton products are not intended for applications wherein failure of Nuvoton products could result or lead to a situation where personal injury, death or severe property or environmental damage could occur.

Nuvoton customers using or selling these products for use in such applications do so at their own risk and agree to fully indemnify Nuvoton for any damages resulting from such improper use or sales.

Please note that all data and specifications are subject to change without notice. All the trademarks of products and companies mentioned in this datasheet belong to their respective owners.