| Rev | AWO # | Description | Date | Appr |
|---|---|---|---|---|
| - | | RELEASED | 3/13/06 | |

APPROVED: _____

DATE: _____ TITLE: _____

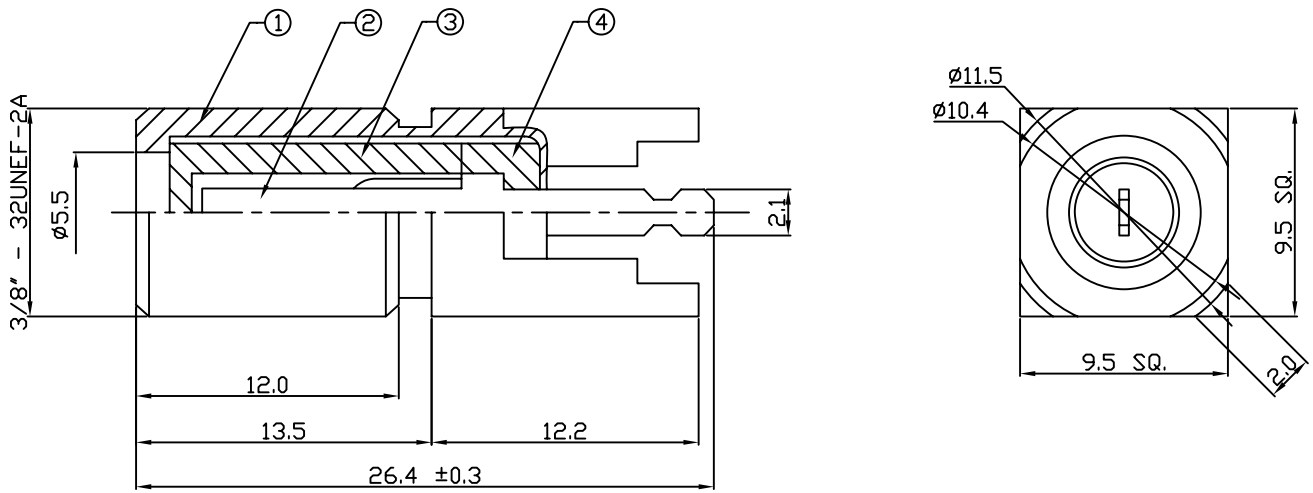


| No. | DESCRIPTION | QTY | MATERIAL | FINISH |
|---|---|---|---|---|
| 4 | INSULATOR | 1 | POLYPROPYLENE | WHITE |
| 3 | INSULATOR | 1 | POLYPROPYLENE | WHITE |
| 2 | PIN | 1 | PHOSPHOR BRONZE | TIN |
| 1 | BODY | 1 | BRASS | NICKEL |

*SPECIFICATIONS:*

Electrical:

Nominal Impedance: 75 ohms
Frequency range: 0–4 GHz
Maximum peak voltage: 500V
Insulation resistance: 5000 Mohm min @ 500 VDC
Dielectric withstanding voltage: 1500 VAC rms

Environmental:

Lead free, RoHS compliant. RoHS COMPLIANT

UNLESS OTHERWISE SPECIFIED
ALL DIMENSIONS ARE INCHES [MM]
TOLERANCES: EXCEPT AS NOTED

| INCHES | | HOLES | |
|---|---|---|---|
| .X | ± .10 | Ø.X | ±.10 |
| .XX | ± .020 | Ø.XX | ±.015 |
| .XXX | ± .015 | Ø.XXX | ±.010 |

| APPROVALS | | DATE |
|---|---|---|
| DRAWN | SS | 3/13/06 |
| CHECKED | | |
| APPROVED | | |


**ADAM TECH**
909 Rahway Avenue, Union, NJ 07083
Phone: 908-687-5000 Fax: 908-687-5710


TITLE: F TYPE FEMALE, PCB, 75 OHM POLYPROPYLENE INSULATOR

| SIZE | PART NO. | REV. |
|---|---|---|
| X | RF4-10-P-00-75 | - |

REF: | SCALE: NTS | SHEET 1 OF 1