M61529FP

Audio Signal Processor with Surround

REJ03F0010-0100Z
Rev.1.00
Sep.04.2003

Description

M61529FP is the semiconductor integrated circuit for Home Audio. M61529FP includes 2ch electronic volume, Tone control, 4 Input Selector, Bass Boost, REC output and Mic Mixing. This IC is suitable for Mini Component. A difference in M61529FP and M61519FP has just changed Tone Input ATT from 0/–13dB to 0/–8.2dB.

Features

- 2ch Master Volume (L,R Independent Control)
  Main Volume : 0dB to –76dB (2dB or 4dB step), –∞
  Trim Volume : 0dB to –15dB (1dB step)
  *Total level is fixed at –87dB, on condition that the total level of Trim and Master volume is under "–87dB".
- Tone Control (Bass/Mid/Treble)
  ±8dB (2dB step)
- 4 Input Selector with Mute
- Surround Function
- Vocal Cut Function
- Bass Boost Function
- L+R Output for Spectrum Analysis Display
- L+R Output for Subwoofer
- MIC Mixing Function
- 2 REC output with mute
- Input ATT : –5/0/+3.5dB
- Tone Input ATT : 0/–8.2dB
- External Input ATT : +3/0/–3/–6dB

Application

Mini/Micro Component, Radio-Cassette Recorder with CD Player, etc.

Recommended Operating Conditions

Supply voltage range……8.0 to 10.0V

Recommended supply voltage……...…...9.0V

System Block Diagram

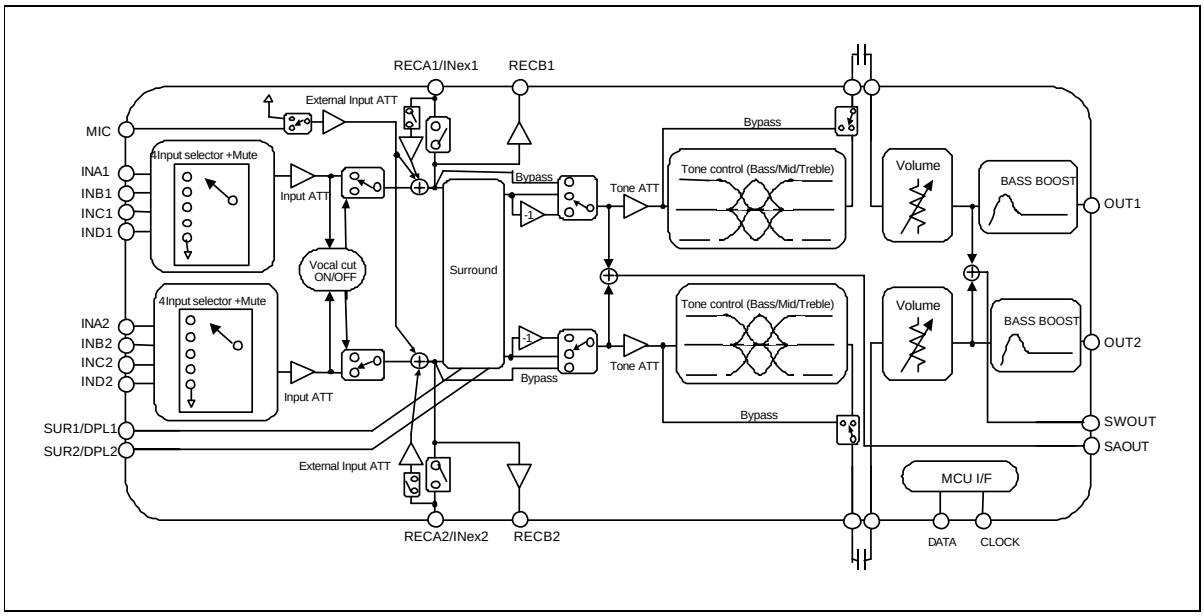

Pin Configuration and Block Diagram

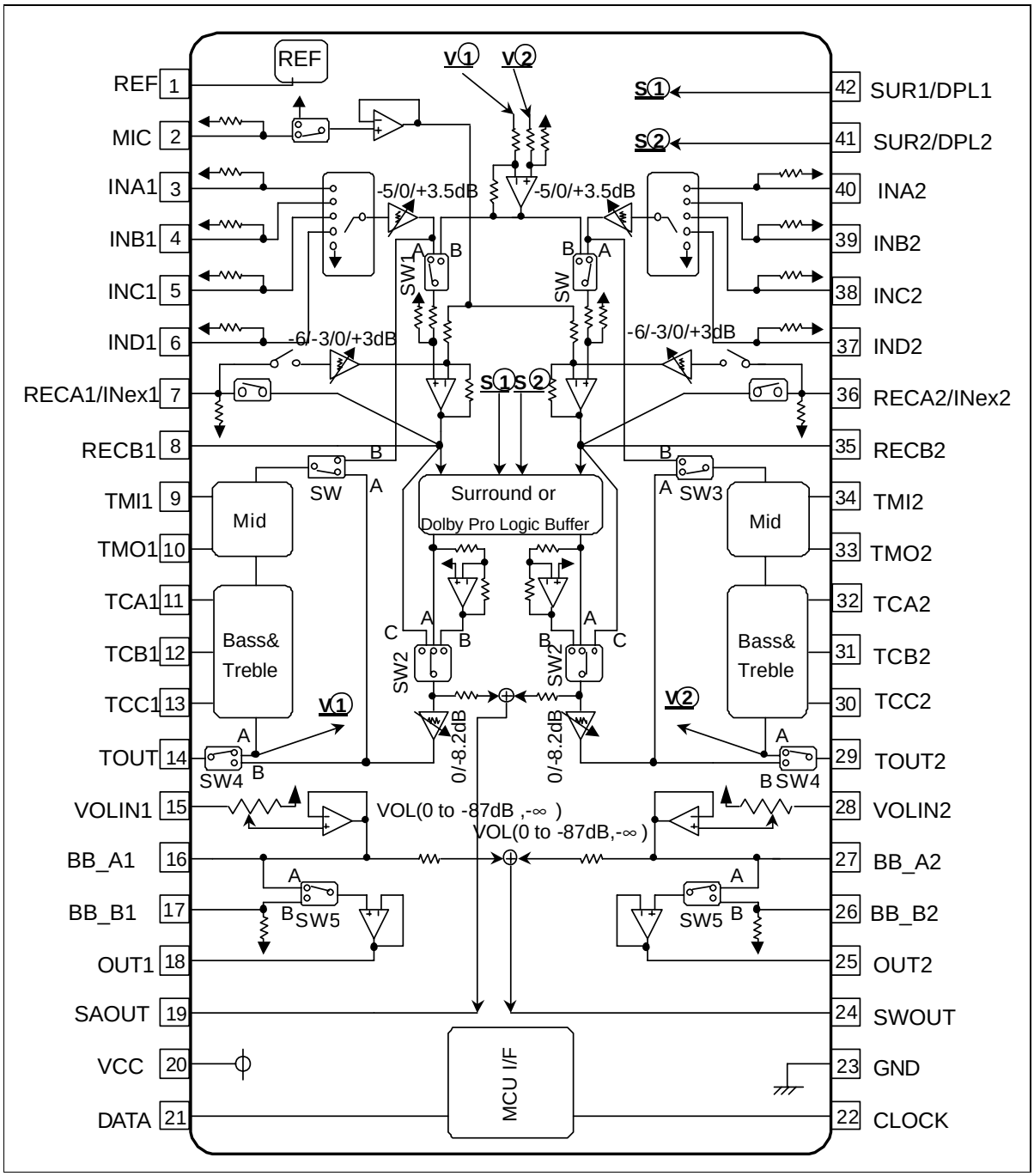

Note : Dolby

Pin Descliption

Pin No.	Symbol	Function
1	REF	Input pin of internal reference (REF=4.5V)
2	MIC	Input pin of MIC Mixing
3, 4, 5, 6 37, 38, 39, 40	INA to IND	Input Selector
41, 42	SUR/DPL	External pins for surround,Switching use with DPL Input pin
7, 8, 35, 36	RECA/INex, RECB	Output pins for REC, RECA can switch mute function and external Input pins (At external input, RECA Switch is fixed mute position.)
9, 10, 33, 34	TMI, TMO	External pins for Mid (sympathetic vibration type)
11, 12, 13, 30, 31, 32	TCA, TCB, TCC	External pins for Bass/Treble (Shelving type)
14, 29	TOUT	Output pins of tone control
15, 28	VOLIN	Input pins of electronic volume
16, 17, 26, 27	BB_A, BB_B	External pins for Bass boost
18, 25	OUT	Output pins
19	SAOUT	Mix pins for spectrum Analyzer (L+R/2)
24	SWOUT	Mix pin for super woofer
20	VCC	Internal analog, power pin for digital circuit
23	GND	Internal analog, GND pin for digital circuit
21, 22	DATA, CLOCK	DATA for serial data, Clock input pin

Absolute Maximum Ratings

Symbol	Parameter	Conditions	Limits	Units
V_{CC}	Supply voltage		10.5	V
Pd	Power dissipation	Ta ≤ 25°C	850	mW
K	Thermal derating	Ta > 25°C	8.6	mW/ °C
Topr	Operating temperature		–20 to +75	°C
Tstg	Storage temperature		–40 to +125	°C

Thermal Derating

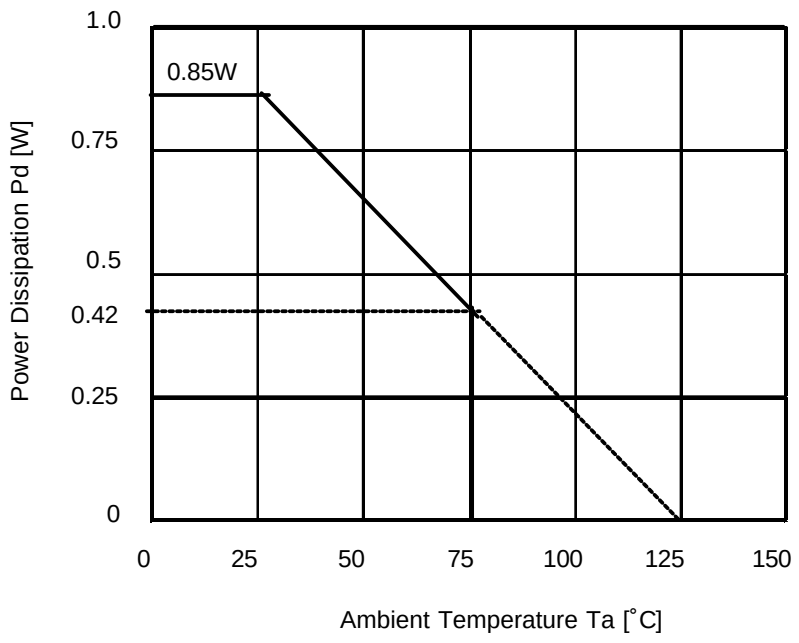

Recommended Opreting Confition

(Ta = 25ºC, unless otherwise noted.)

Parameter	Symbol	Condition	Min	Typ	Max	Unit
Supply Voltage	V_{CC}		8	9	10	V
Logic “H” level Input voltage	V_{IH}	V_{CC} = 9V	2.2	—	5.5	V
Logic “L” level Input voltage	V_{IL}	V_{CC} = 9V	0	—	0.6	V

Rerationship Between Data and Clock and Latch

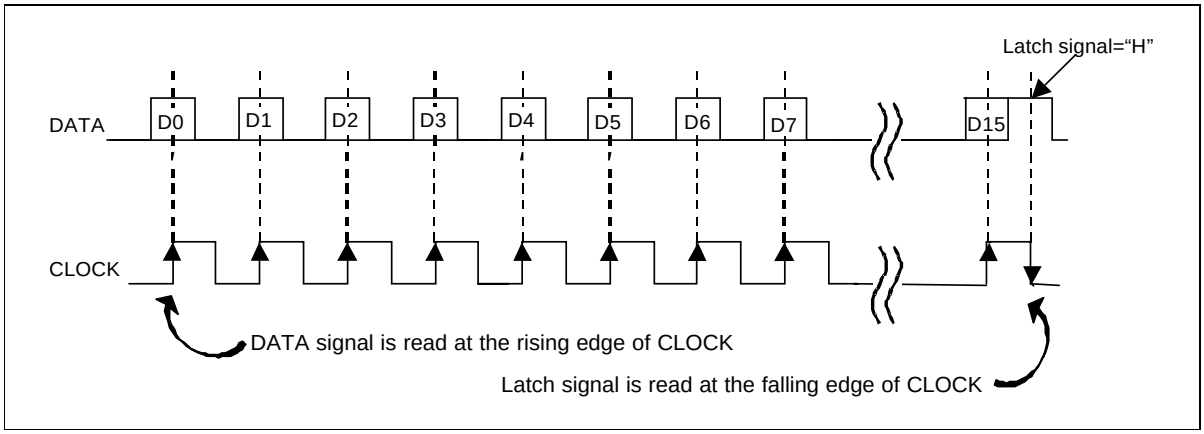

Data Timing (Recommended conditions)

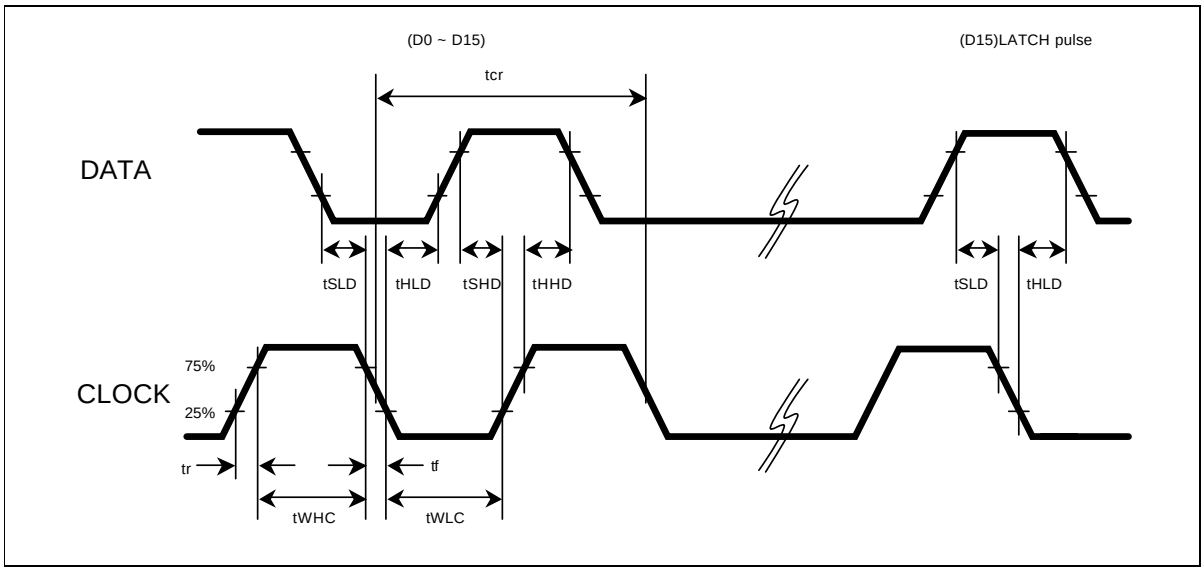

Digital Block Timing Regulation

Symbol	Parameter	Limits Min	typ	Max	Unit
t_{cr}	CLOCK cycle time	4	—	—	
t_{WHC}	CLOCK pulse width ("H" level)	1.6	—	—	
t_{WLC}	CLOCK pulse width ("L" level)	1.6	—	—	
t_r	CLOCK rise time	—	—	0.4	
t_f	CLOCK fall time	—	—	0.4	µs
t_{SHD}	DATA setup time ("H" level) CLOCK rise	0.8	—	—	
t_{SLD}	DATA setup time ("L" level) CLOCK rise	0.8	—	—	
t_{HHD}	DATA hold time ("H" level)	0.8	—	—	
t_{HLD}	DATA hold time ("L" level)	0.8	—	—	

Digital Control Specification

Prohibit using except specified Data code as follows.

(At power on, initial position is • mark's setting.)

← Input direction

	D0	D1	D2	D3	D4	D5	D6	D7	D8	D9	D10	D11	D12	D13	D14	D15
A	Input Selector			Input ATT		Tone ATT	Vocal cut Tone bypass		Mic MIX	RECA/ External Input			Surround/ DPLIN		0	0
B	Tone Control SW	Tone Ccontrol Bass					Tone control Mid				Tone control Treble				0	1
C	Lch Trim Volume			Rch Trime Volume					Bass Boost	0	0	0	0	0	1	0
D	Lch Master Volume					Rch Master Volume					0	0	0	0	1	1

(1) Input selector

Selector	D0A	D1A	D2A
INA	0	0	0
INB	0	0	1
INC	0	1	0
IND	0	1	1
● Mute	1	*	*

(2) Input ATT

Input ATT	D3A	D4A
● -5dB	0	0
0dB	0	1
+3.5dB	1	0

(3) Tone ATT

Tone ATT	D5A
● -8.2dB	0
0dB	1

(4) Vocal cut & Tone bypass

Switching	D6A	D7A
● Vocal cut OFF,Tone Bypass	0	0
Vocal cut OFF,Tone ON	0	1
Vocal cut ON,Tone Bypass	1	*

(5) MIC Mixing

Mic Mixing	D8A
● OFF	0
ON	1

(6) RECA / External Input

	Switching	D9A	D10A	D11A
External Input Off	● RECA-OFF	0	*	0
External Input Off	RECA-ON	0	*	1
External Input ON	+3dB	1	0	0
External Input ON	0dB	1	0	1
External Input ON	-3dB	1	1	0
External Input ON	-6dB	1	1	1

• At external Input setting ,RECA is OFF.

(7) Surround / DPLIN

Switching	D12A	D13A
● Bypass	0	0
Surround	0	1
DPLIN	1	0

(8) Switching of Tone control

Switching	D0B	D1B
● Lch and Rch	0	0
Lch only	0	1
Rch only	1	0

(9) Tone control (Bass, Mid, Treble)

Tone	D2,6,10B	D3,7,11B	D4,D8,12B	D5,D9,13B
+8dB	1	1	0	0
+6dB	1	0	1	1
+4dB	1	0	1	0
+2dB	1	0	0	1
● 0dB	0	0	0	0
-2dB	0	0	0	1
-4dB	0	0	1	0
-6dB	0	0	1	1
-8dB	0	1	0	0

(11) Bass boost

Bass Boost	D8C
● OFF	0
ON	1

(10) Trim volume (Lch and Rch)

Trim	D0, 4C	D1, 5C	D2, 6C	D3, 7C
● 0dB	0	0	0	0
–1dB	0	0	0	1
–2dB	0	0	1	0
–3dB	0	0	1	1
–4dB	0	1	0	0
–5dB	0	1	0	1
–6dB	0	1	1	0
–7dB	0	1	1	1
–8dB	1	0	0	0
–9dB	1	0	0	1
–10dB	1	0	1	0
–11dB	1	0	1	1
–12dB	1	1	0	0
–13dB	1	1	0	1
–14dB	1	1	1	0
–15dB	1	1	1	1

Note : Total level is fixed at –87dB, on condition that the total level of Trim and Master volume is under “–87dB”.
(example: Trim –15dB, Master –76dB Total level is –87dB)

(12) Master volume (L, Rch)

Master	D0, 5D	D1, 6D	D2, 7D	D3, 8D	D4, 9D
0dB	0	0	0	0	0
–2dB	0	0	0	0	1
–4dB	0	0	0	1	0
–6dB	0	0	0	1	1
–8dB	0	0	1	0	0
–10dB	0	0	1	0	1
–12dB	0	0	1	1	0
–14dB	0	0	1	1	1
–16dB	0	1	0	0	0
–18dB	0	1	0	0	1
–20dB	0	1	0	1	0
–22dB	0	1	0	1	1
–24dB	0	1	1	0	0
–26dB	0	1	1	0	1
–28dB	0	1	1	1	0
–30dB	0	1	1	1	1
–32dB	1	0	0	0	0
–34dB	1	0	0	0	1
–36dB	1	0	0	1	0
–38dB	1	0	0	1	1
–40dB	1	0	1	0	0
–42dB	1	0	1	0	1
–44dB	1	0	1	1	0
–48dB	1	0	1	1	1
–52dB	1	1	0	0	0
–56dB	1	1	0	0	1
–60dB	1	1	0	1	0
–64dB	1	1	0	1	1
–68dB	1	1	1	0	0
–72dB	1	1	1	0	1
–76dB	1	1	1	1	0
● –∞dB	1	1	1	1	1

Electrical Characteristics

Unless otherwise noticed, Ta = 25°C, VCC = 9V, f = 1kHz, Surround bypass,tone bypass and bass boost = OFF

	Parameter	Symbol	Test Condition		Limits Min	Typ	Max	Unit
Voltage	Analog positive power circuit current	Alcc	At V_{cc}=9.0V, 20 pin terminal current and no signal		—	25	40	mA
Input and Output	Input resistance	Rin	Input pin 3-6pin,37-40pin,2pin		30	60	90	kΩ
	Maximum input voltage	VIM	(3,40)pin IN, (8,35)pin OUT RL=10kΩ, THD=1%, Input ATT=–5dB		1.8	2.2	—	Vrms
	Maximum output voltage	VOM	(3,40)pin IN, (18,25)pin OUT Bass boost ON, f=100Hz, RL=10kΩ, THD=5%		1.8	2.2	—	Vrms
		VrecOM	(3,40)pin IN, (7,8)(35,36)pin OUT RL=47kΩ, THD=1%, Input ATT=+3.5dB		1.6	2.0	—	Vrms
	Output terminal voltage	Vodc	At No signal, (18,25)pin OUT		4.0	4.5	5.0	V
		Vrecdc			4.0	4.5	5.0	V
	Pass gain	Gv	Vi=1Vrms,FLAT, Gain from (3-18 pin) to (40-25 pin), Input ATT=0dB		–2.0	0.0	2.0	dB
	Maximum attenuation	ATT	Vo=1Vrms,(18,25)pin OUT JIS-A,Vol.=–∞		—	–92	–87	dB
	Output noise voltage	Vono	JIS-A, At no signal,Rg=0W (8.35)pin OUT	Vol.=0dB	—	10.0	20.0	µVrms
				Vol.=–∞	—	4.0	8.0	µVrms
	Distortion factor	Vrecno	JIS-A, At no signal, Rg=0Ω (18.25)pin OUT		—	6.0	12.0	µVrms
		THD	BW:400-30kHz, Vo=0.5Vrms, RL=10kΩ		—	0.02	0.05	%
		THDrec	BW:400-30kHz, Vo=0.5Vrms, RL=47kΩ		—	0.01	0.05	%
	Cross talk between channels	CT	Vo.=0.5Vrms,RL=10kΩ, JIS-A, Rg=0kΩ		—	–70	55	dB
		CT rec	Vo.=0.5Vrms, RL=47kΩ, JIS-A, Rg=0kΩ		—	–70	55	dB
Tone Control	Bass voltage gain	Gbassb	f=100Hz	–8dB	6	8	10	dB
		Gbassc		+8dB	–10	–8	–6	dB
	Mid voltage gain	Gmidb	f=1kHz	–8dB	6	8	10	dB
		Gmidc		–8dB	–10	–8	–6	dB
	Trebble voltage gain	Gtrebb	f=10kHz	+8dB	6	8	10	dB
		Gtrebc		–8dB	–10	–8	–6	dB
	Balance between channel	BALton	At each boost value of -8dB and +8dB, Vo=1Vrms, (14,29)pin OUT		–2	0	2	dB
MIX Signal	Super woofa output gain	GvSW	Vi=1Vrms, FLAT, Gain from (3-18 pin) to (40-25 pin), Input ATT=0dB		–8.0	–6.0	–4.0	dB
	distortion factor	THDSW	BW:400-30kHz, Vo=0.3Vrms, RL=47kΩ 15pin IN, 24pin OUT		—	0.03	0.1	%
	Output noise voltage	VnoSW	JIS-A, At no signal ,Rg=0Ω, 24pin OUT		—	20	—	µVrms
	Output gain for spectrum Analyzer Display	GvSP	Vi=1Vrms, FLAT, Input ATT=0dB, 3pin IN, 19pin OUT		–8.0	–6.0	–4.0	dB

- Mix Signal Characteristics is provided only CH1 Input. (CH2 Rg=0Ω)

Block Diagram

(1) Vocal cut OFF (Bold line; Selector INA, Surround ON, Tone ON, Bassboost OFF)

SWA	a; Vocal Cut OFF	b; Vocal Cut ON	
SWB	a; Surround	b; DPL	
SWC	External Input ATT(+3/0/–3/–6dB/OFF)		
SWD	a; Surround	b; DPL	c; BYPASS
SWE	a; Tone control	b; Vocal Cut	
SWF	a; Tone control	b; Tone bypass, Vocal Cut	
SWG	a; Bassboost OFF	b; Bassboost ON	

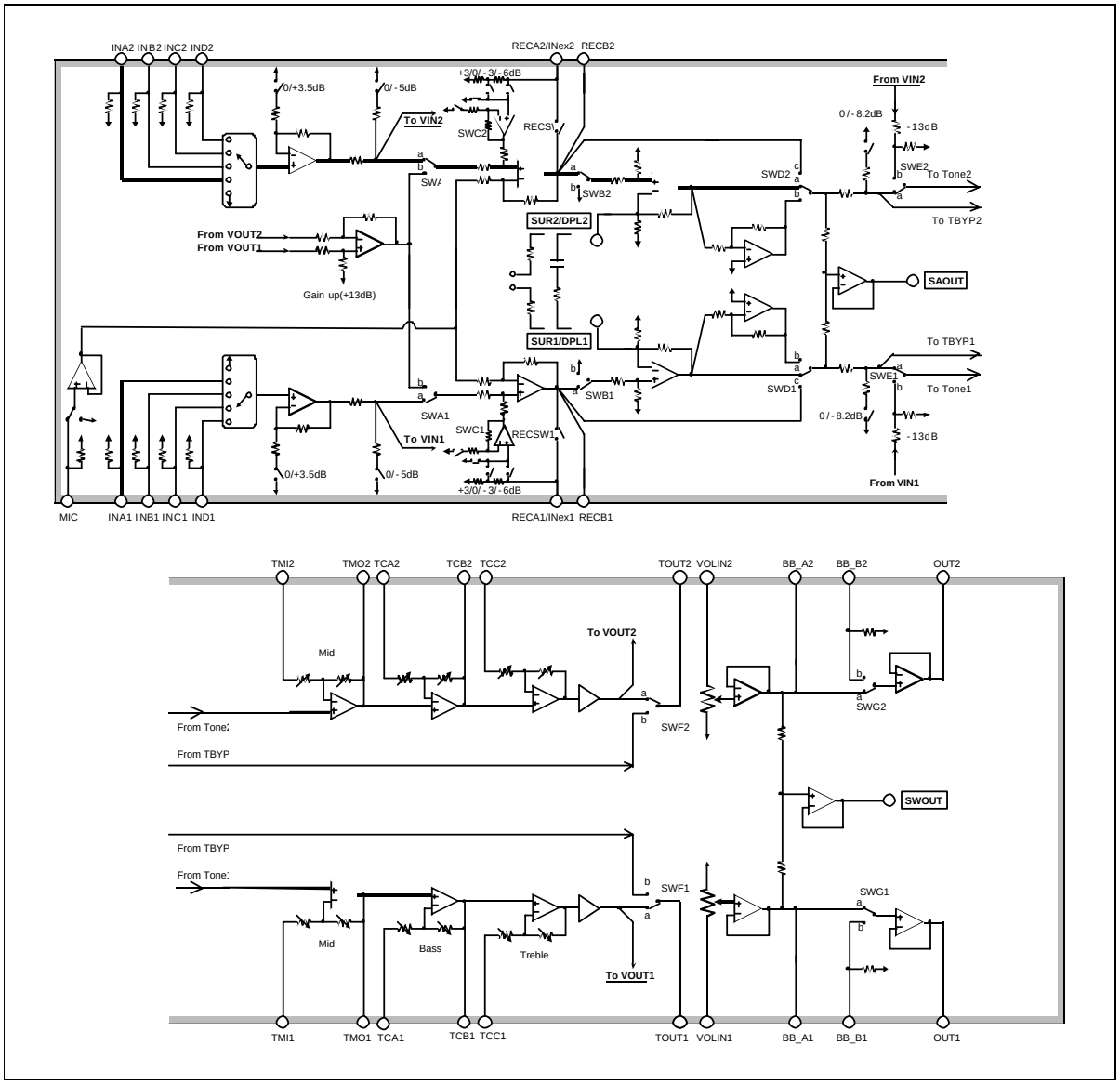

(2) Vocal cut ON (Bold line; Selector INA, Surround ON, Tone OFF, Bassboost OFF)

SWA	a; Vocal Cut OFF	b; Vocal Cut ON	
SWB	a; Surround	b; DPL	
SWC	External Input ATT(+3/0/–3/–6dB/OFF)		
SWD	a; Surround	b; DPL	c; BYPASS
SWE	a; Tone control	b; Vocal Cut	
SWF	a; Tone control	b; Tone bypass, Vocal Cut	
SWG	a; Bassboost OFF	b; Bassboost ON	

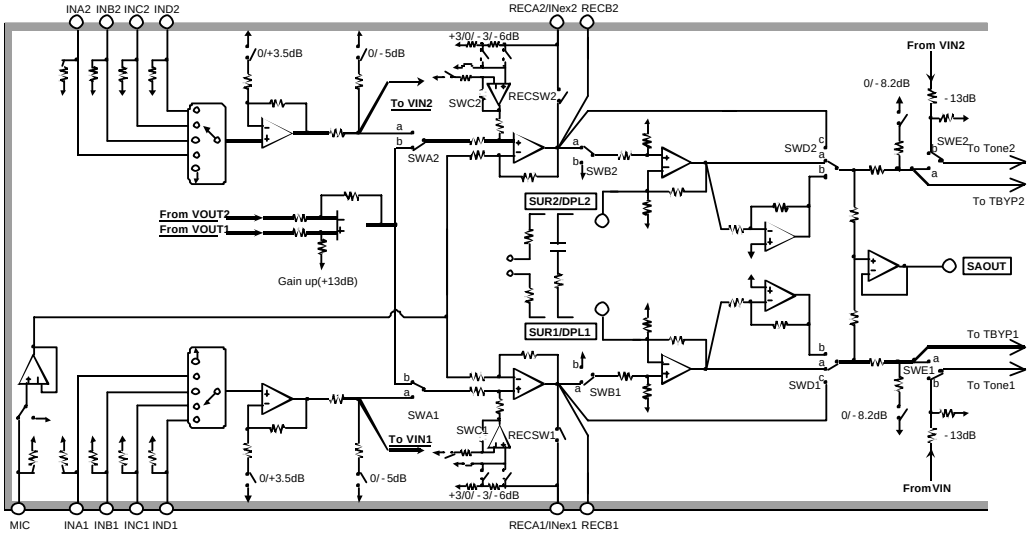

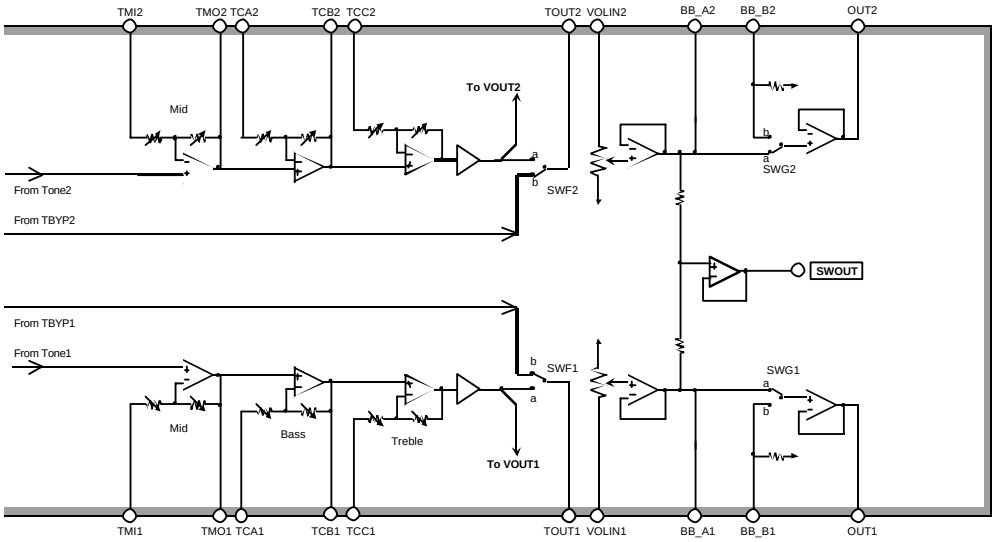

Signal Level Diagram

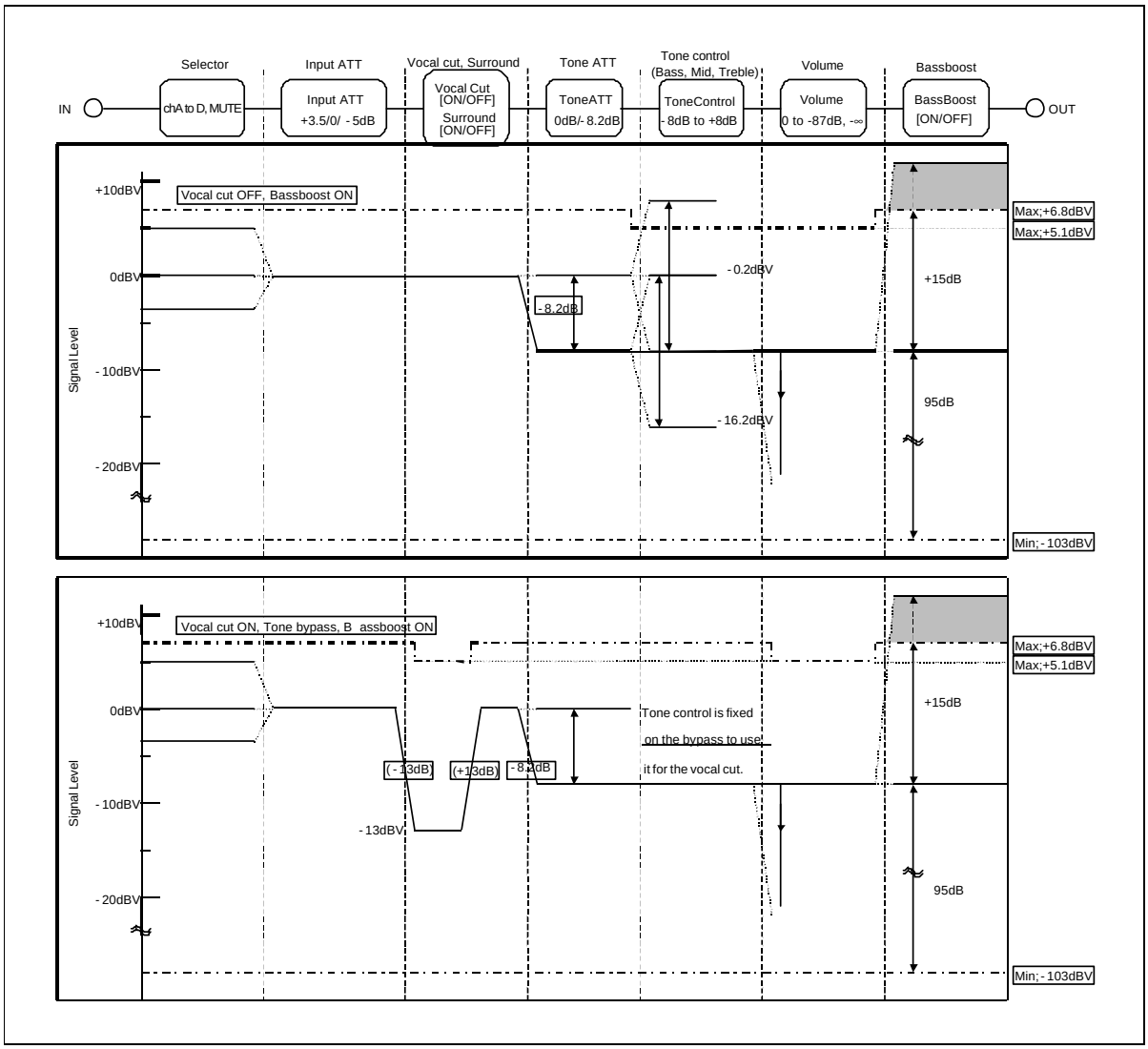

Function Discription

(1) Equivalent circuit of tone control

(a) Mid

Boost Mode

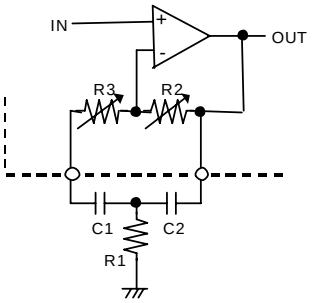

$$fo = \frac{1}{2\pi\sqrt{R1(R2+R3)C1C2}} \quad (Hz)$$

$$Q \cong \frac{1}{C1+C2}\sqrt{\frac{C1C2R2}{R1}} \qquad R3=0$$

$$Gv = 20\log\left(\frac{\frac{R2+R3}{R1}+2}{\frac{R3}{R1}+2}\right) \quad (C1=C2) \quad (dB)$$

Cut Mode

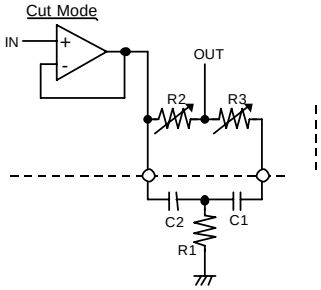

$$fo = \frac{1}{2\pi\sqrt{R1(R2+R3)C1C2}} \quad (Hz)$$

$$Q \cong \frac{1}{C1+C2}\sqrt{\frac{C1C2R2}{R1}} \qquad (R3=0)$$

$$Gv = 20\log\left(\frac{\frac{R3}{R1}+2}{\frac{R2+R3}{R1}+2}\right) \quad (C1=C2) \quad (dB)$$

Setting	R2	R3
±8dB	17.00kΩ	6.80kΩ
±6dB	14.10kΩ	9.70kΩ
±4dB	10.40kΩ	13.40kΩ
±2dB	5.80kΩ	18.00kΩ

(b) Bass

Boost Mode

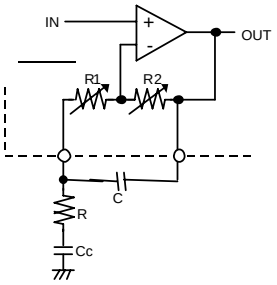

$$fo = \frac{R+R1}{2\pi CR(R1+R2)} \quad (Hz)$$

$$Gv = 20\log\left(\frac{R+R1+R2}{R+R1}\right) \quad (dB)$$

Cut Mode

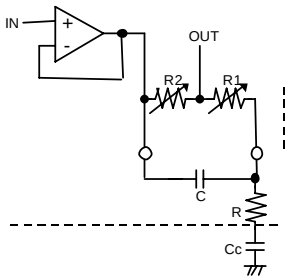

$$fo = \frac{R+R1}{2\pi CR(R1+R2)} \quad (Hz)$$

$$Gv=20\log\left(\frac{R+R1}{R+R1+R2}\right) \quad (dB)$$

Setting	R1	R2
±8dB	0.60kΩ	19.40kΩ
±6dB	4.20kΩ	15.80kΩ
±4dB	8.30kΩ	11.70kΩ
±2dB	13.49kΩ	6.51kΩ

(c) Treble

Boost Mode

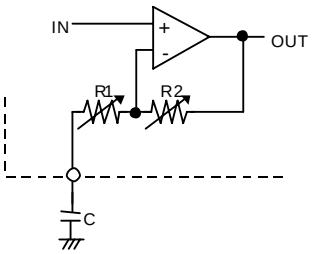

$$fo = \frac{1}{2\pi CR1} \quad (Hz)$$

$$Gv = 20\log\left(\frac{R1+R2}{R1}\right) \quad (dB)$$

Cut Mode

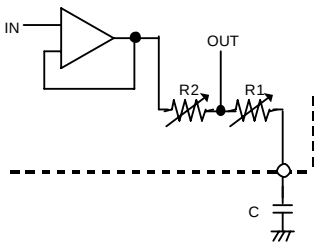

$$fo = \frac{1}{2\pi CR1} \quad (Hz)$$

$$Gv = 20\log\left(\frac{R1}{R1+R2}\right) \quad (dB)$$

Setting	R1	R2
±8dB	5.12kΩ	9.91kΩ
±6dB	6.92kΩ	8.11kΩ
±4dB	9.12kΩ	5.91kΩ
±2dB	11.73kΩ	3.30kΩ

(d) Characteristic Curve of Tone Control

R1=680Ω,R2=214kΩ, C1=C2=0.22μF(fo ≒ 60Hz,Q ≒ 8.9)

• This characteristic curve is a result of circuit simulation.

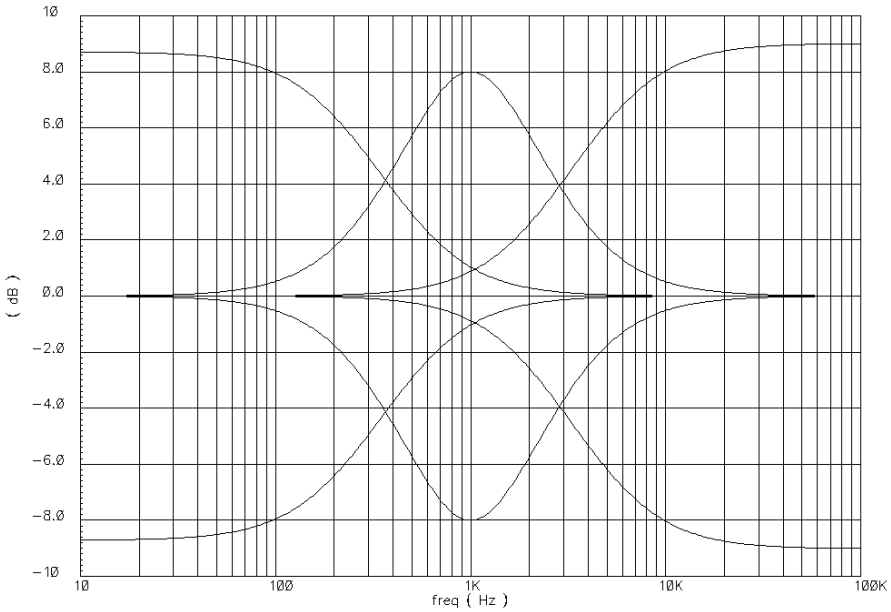

(2) Equivalent circuit of bass boost

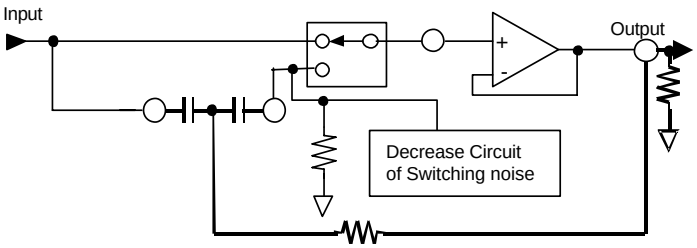

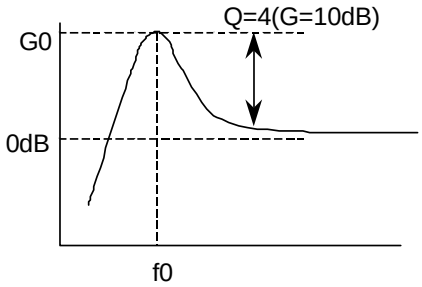

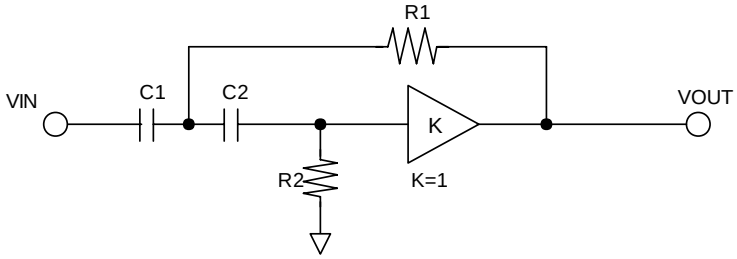

The Internal IC have built-in R2 resistance. (R2 = 214kΩ)

$$fo = \frac{1}{2\pi\sqrt{R1R2C1C2}} \text{ (Hz)} \qquad Q = \frac{\sqrt{R1R2C1C2}}{R1(C1+C2)+(1-K)R2C2}$$

Reference Table

Q	G0
1	0 to 1dB
2	6dB
4	10dB
5	13dB
10	20dB

Amplitude characteristic of secondary high pass filter

- Characteristic Curve of bass boost

• A; CH1 bass = +8dB,Treble = +8dB
CH2 bass = +4dB,Treble = +4dB

• B; CH1bass = +8dB,Treble = +8dB
CH2bass = +4dB,Treble = +6dB

This characteristic curve is as a result of circuit simulation.

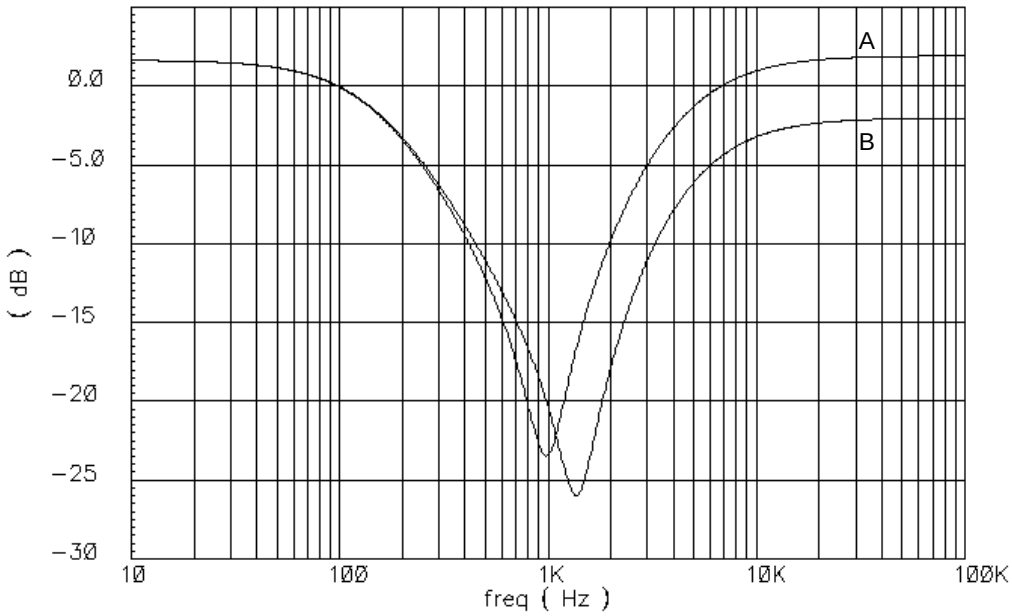

(3) Equivalent circuit of vocal cut

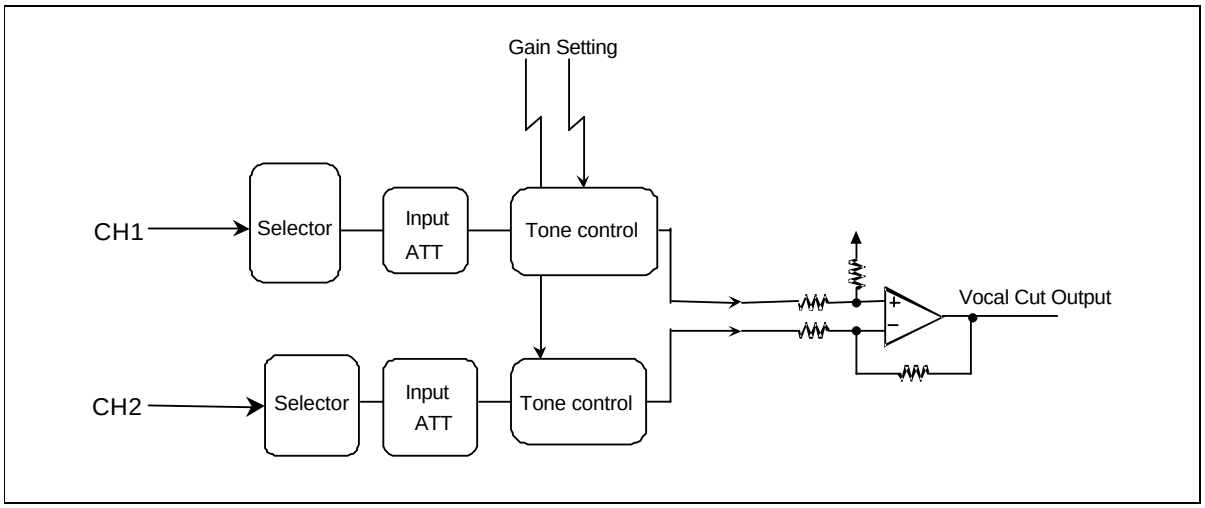

- Tone control cannot use at Vocal cut mode.
- Tone control can use only Bass & Treble mode. (Mid mode is 0dB fixed.)

Output difference of Tone control CH1 and CH2, The characteristic to cut only Middle part of Phase Input Signal is realized.

- Characteristic curve example (Phase signal input CH1,CH2)

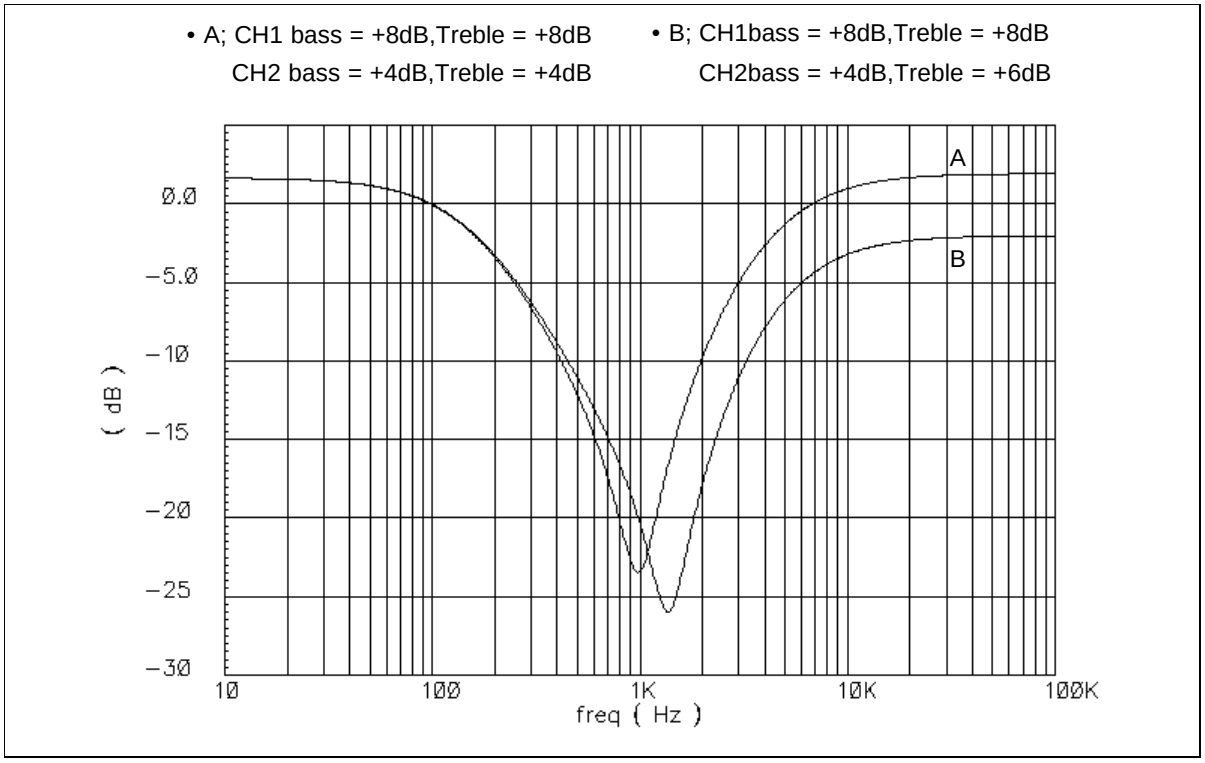

(4) Surround equivalent circuit

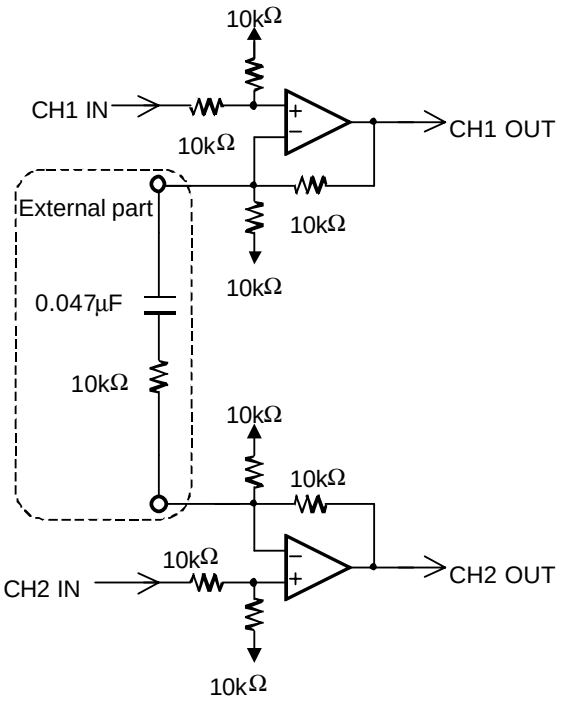

- Characteristic curve example (Only CH1 Input)

• This characteristic curve is the result as circuit simulation.

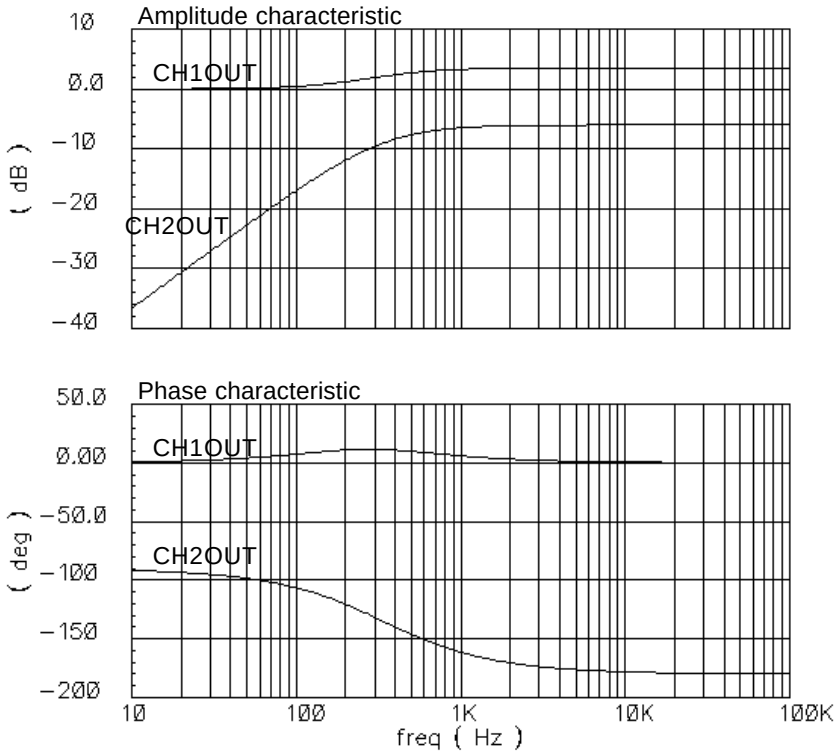

(5) Total equivalent circuit (signal flow diagram)

(a) Surround bypass, Tone bypass, Bass boost ON

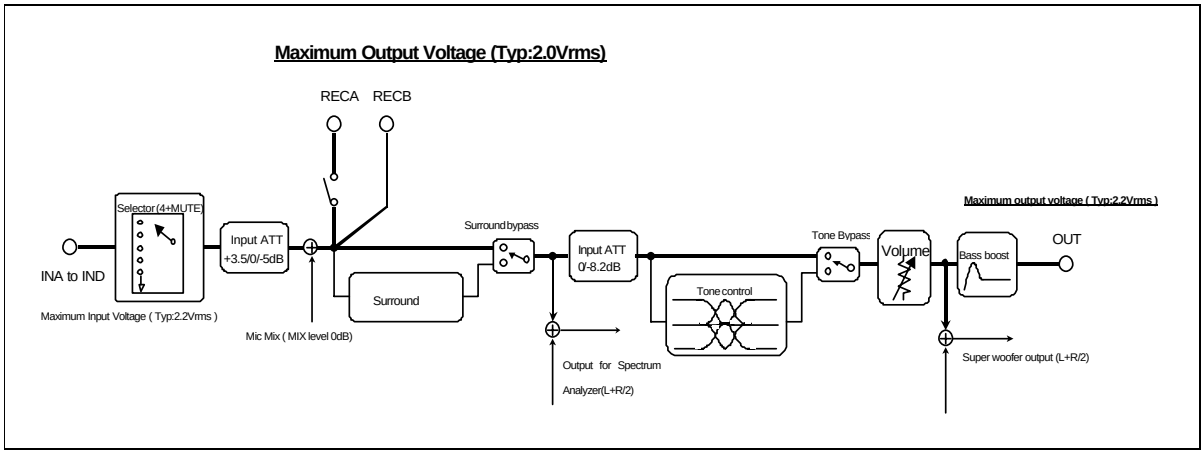

(b) Surround ON, Tone ON, Bass boost ON

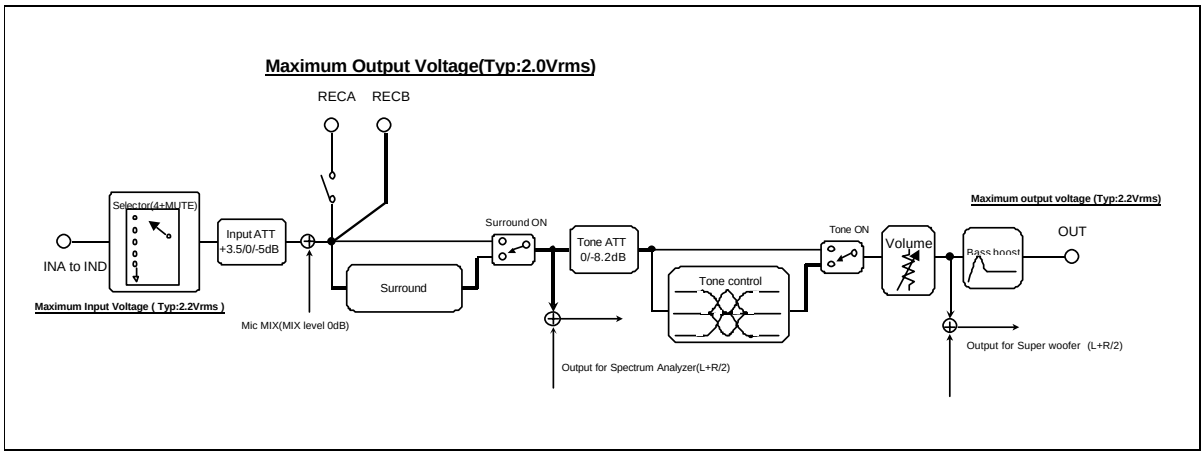

(c) DPL Input setting, Tone bypass, Bass boost ON

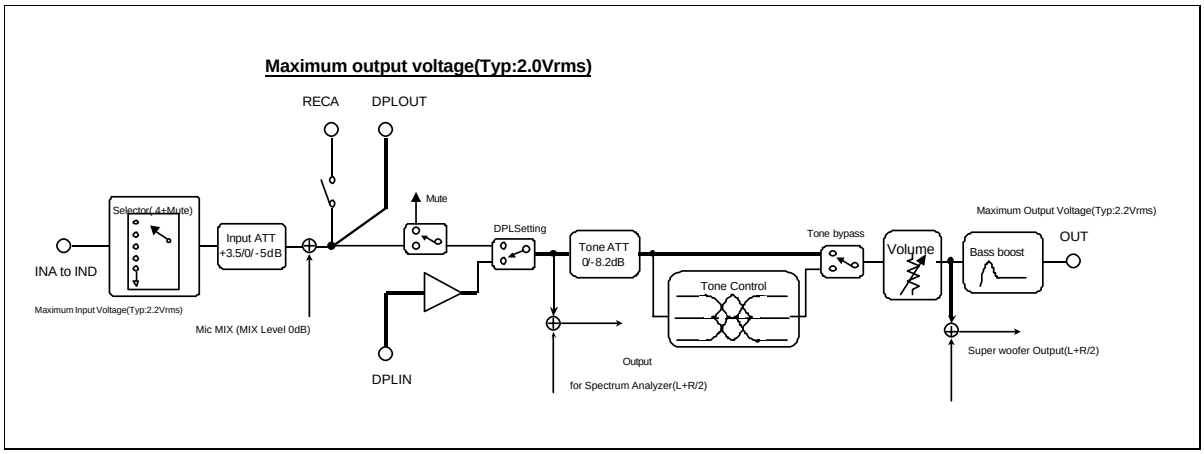

(d) External Input Setting, Surround ON, Tone ON, Bass boost ON

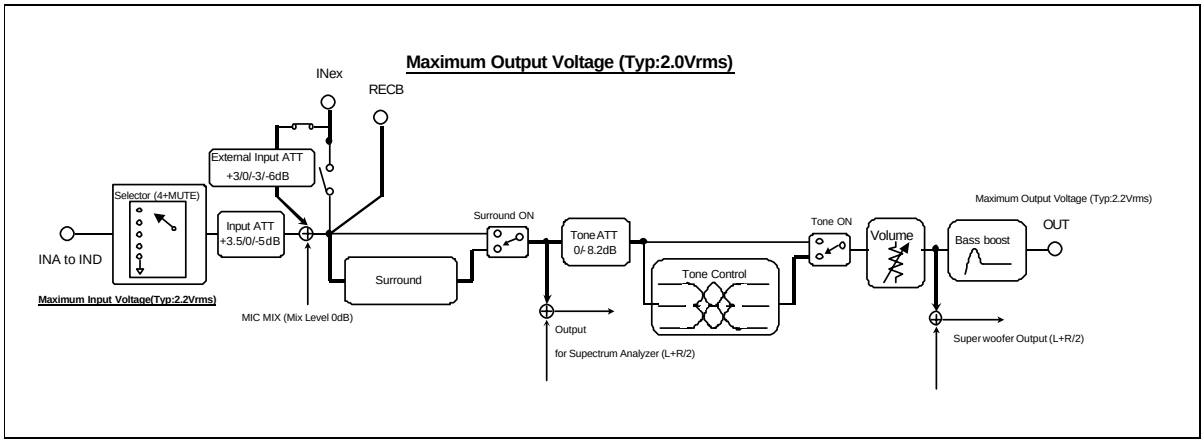

(e) Vocal Cut ON, Surround Bypass, Bass boost ON

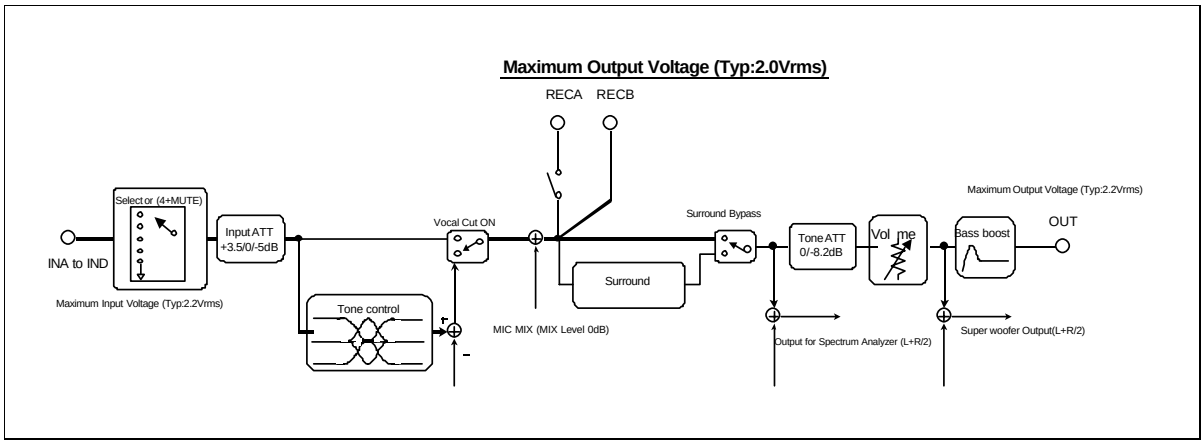

System Reset

(a) IC's condition of power supply turn on

This IC is the system composition which compulsory resetting when power supply turn on.

- Time constant of power supply is used, and reset pulse is formed.
- When V_{CC} exceed 5.5V, reset pulse is transmitted. (Logic circuit ON) [1]
- The operation time of reset is released reset pulse [2] from transmitted reset pulse [1].
- Trst = [Timing A + about 20us] is time of released reset pulse.
  (Timing A is time of V_{CC} exceed 5.5V.)

<Timing of reset>

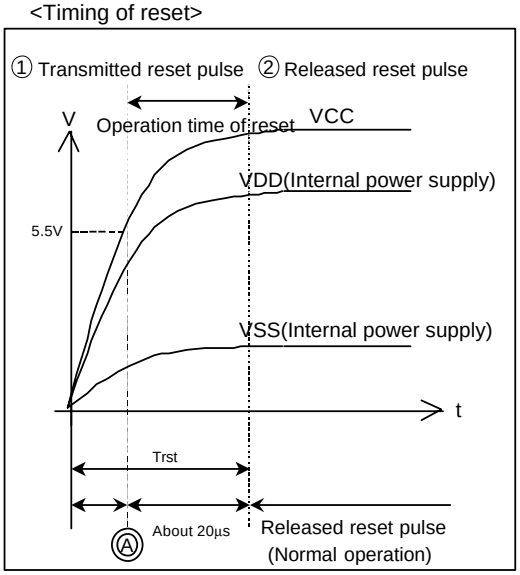

<REF Voltage>

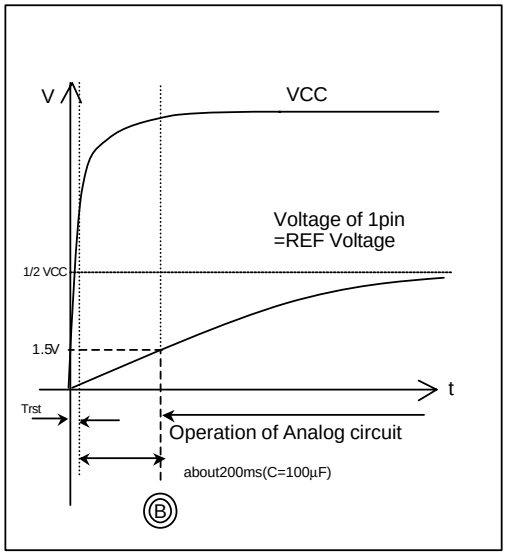

The power supply is turned on, and resetting is released after Trst, and the reception of the serial data becomes possible in Logic block.

However, REF voltage doesn't operate in less than 1.5V in the analog block. Make REF voltage is to transmit serial data by more than 1.5V.

- REF Voltage ≥ Time of REF=1.5V =Timing B
  (Timing B is time when analog block operates and to become possible.)

<EX> Capacitor of 1pin =100µF

Becomes REF ≥ 1.5V in about 200ms.

(b) IC's condition of power supply turn off

Internal power supply (V_{DD}, V_{SS}) decreases to V_{CC} together, too.

All the data set up when Logic turned it off become invalid.

Application Example

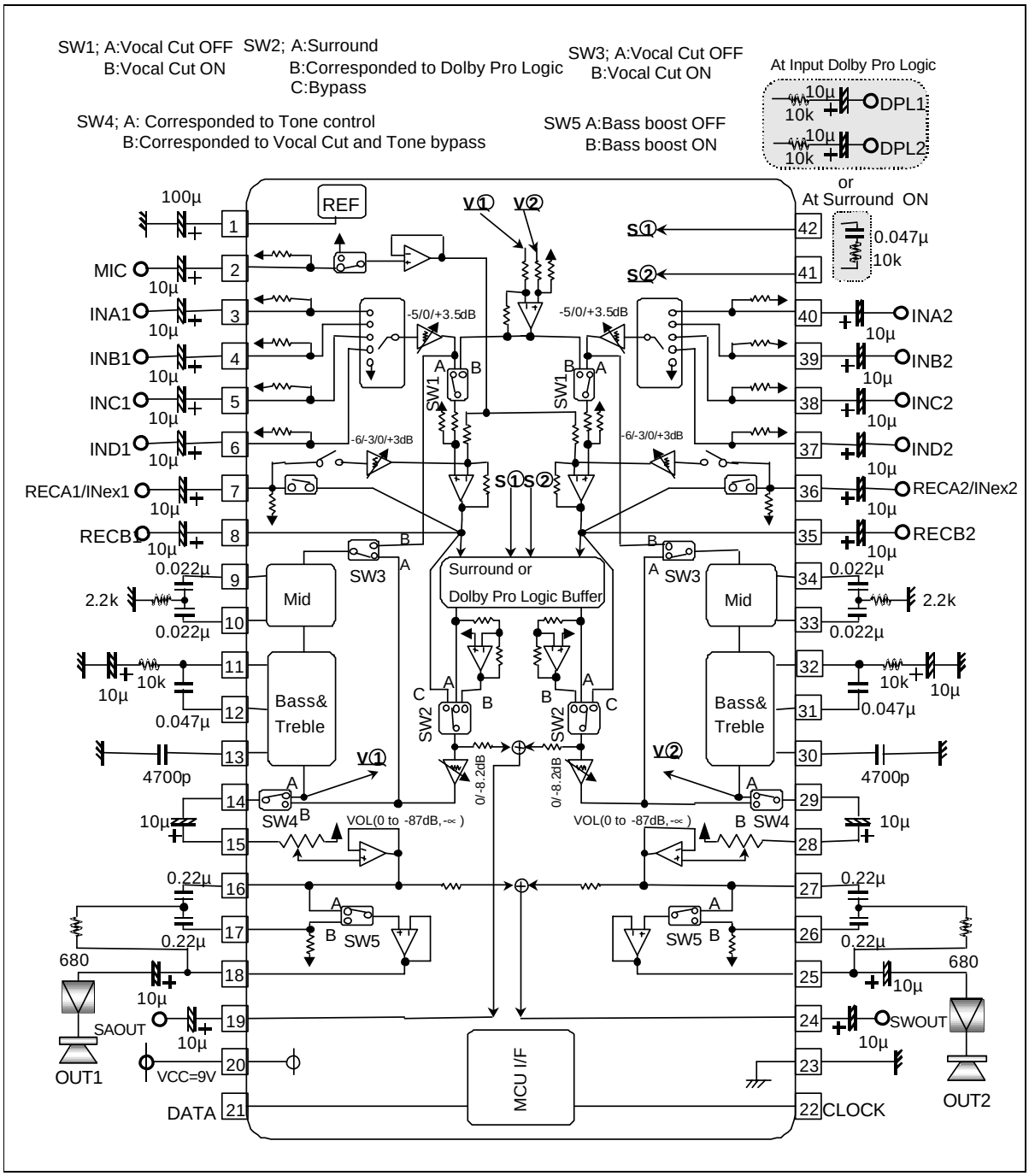

Detailed Diagram Of Package Outline

42P2R-E (MMP) **Plastic 42pin 450mil SSOP**

EIAJ Package Code	JEDEC Code	Weight(g)	Lead Material
SSOP42-P-450-0.80	–	–	Cu Alloy+42 Alloy

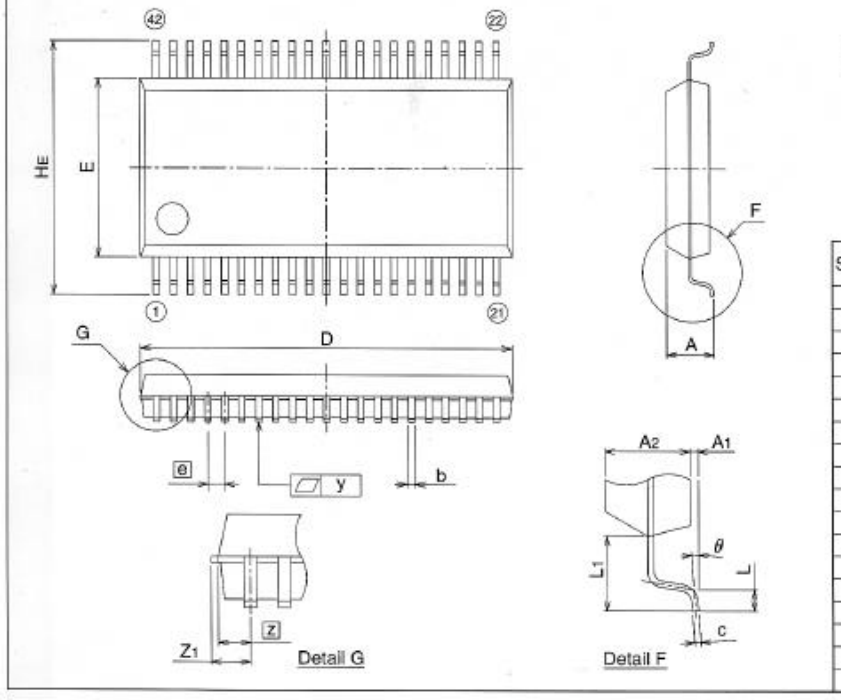

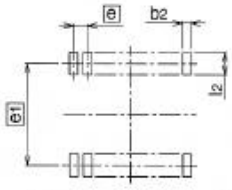

Recommended Mount Pad

Symbol	Dimension in Millimeters		
	Min	Nom	Max
A	–	–	2.4
A_1	0.05	–	–
A_2	–	2.0	–
b	0.25	0.3	0.4
c	0.13	0.15	0.2
D	17.3	17.5	17.7
E	8.2	8.4	8.6
e	–	0.8	–
H_E	11.63	11.93	12.23
L	0.3	0.5	0.7
L_1	–	1.765	–
z	–	0.75	–
Z_1	–	–	0.9
y	–	–	0.15
θ	0°	–	10°
b_2	–	0.5	–
e_1	–	11.43	–
l_2	1.27	–	–

Renesas Technology Corp. Sales Strategic Planning Div. Nippon Bldg., 2-6-2, Ohte-machi, Chiyoda-ku, Tokyo 100-0004, Japan

Keep safety first in your circuit designs!
1. Renesas Technology Corp. puts the maximum effort into making semiconductor products better and more reliable, but there is always the possibility that trouble may occur with them. Trouble with semiconductors may lead to personal injury, fire or property damage.
Remember to give due consideration to safety when making your circuit designs, with appropriate measures such as (i) placement of substitutive, auxiliary circuits, (ii) use of nonflammable material or (iii) prevention against any malfunction or mishap.

Notes regarding these materials
1. These materials are intended as a reference to assist our customers in the selection of the Renesas Technology Corp. product best suited to the customer's application; they do not convey any license under any intellectual property rights, or any other rights, belonging to Renesas Technology Corp. or a third party.
2. Renesas Technology Corp. assumes no responsibility for any damage, or infringement of any third-party's rights, originating in the use of any product data, diagrams, charts, programs, algorithms, or circuit application examples contained in these materials.
3. All information contained in these materials, including product data, diagrams, charts, programs and algorithms represents information on products at the time of publication of these materials, and are subject to change by Renesas Technology Corp. without notice due to product improvements or other reasons. It is therefore recommended that customers contact Renesas Technology Corp. or an authorized Renesas Technology Corp. product distributor for the latest product information before purchasing a product listed herein.
The information described here may contain technical inaccuracies or typographical errors.
Renesas Technology Corp. assumes no responsibility for any damage, liability, or other loss rising from these inaccuracies or errors.
Please also pay attention to information published by Renesas Technology Corp. by various means, including the Renesas Technology Corp. Semiconductor home page (http://www.renesas.com).
4. When using any or all of the information contained in these materials, including product data, diagrams, charts, programs, and algorithms, please be sure to evaluate all information as a total system before making a final decision on the applicability of the information and products. Renesas Technology Corp. assumes no responsibility for any damage, liability or other loss resulting from the information contained herein.
5. Renesas Technology Corp. semiconductors are not designed or manufactured for use in a device or system that is used under circumstances in which human life is potentially at stake. Please contact Renesas Technology Corp. or an authorized Renesas Technology Corp. product distributor when considering the use of a product contained herein for any specific purposes, such as apparatus or systems for transportation, vehicular, medical, aerospace, nuclear, or undersea repeater use.
6. The prior written approval of Renesas Technology Corp. is necessary to reprint or reproduce in whole or in part these materials.
7. If these products or technologies are subject to the Japanese export control restrictions, they must be exported under a license from the Japanese government and cannot be imported into a country other than the approved destination.
Any diversion or reexport contrary to the export control laws and regulations of Japan and/or the country of destination is prohibited.
8. Please contact Renesas Technology Corp. for further details on these materials or the products contained therein.

RENESAS

RENESAS SALES OFFICES

http://www.renesas.com

Renesas Technology America, Inc.
450 Holger Way, San Jose, CA 95134-1368, U.S.A
Tel: <1> (408) 382-7500 Fax: <1> (408) 382-7501

Renesas Technology Europe Limited.
Dukes Meadow, Millboard Road, Bourne End, Buckinghamshire, SL8 5FH, United Kingdom
Tel: <44> (1628) 585 100, Fax: <44> (1628) 585 900

Renesas Technology Europe GmbH
Dornacher Str. 3, D-85622 Feldkirchen, Germany
Tel: <49> (89) 380 70 0, Fax: <49> (89) 929 30 11

Renesas Technology Hong Kong Ltd.
7/F., North Tower, World Finance Centre, Harbour City, Canton Road, Hong Kong
Tel: <852> 2265-6688, Fax: <852> 2375-6836

Renesas Technology Taiwan Co., Ltd.
FL 10, #99, Fu-Hsing N. Rd., Taipei, Taiwan
Tel: <886> (2) 2715-2888, Fax: <886> (2) 2713-2999

Renesas Technology (Shanghai) Co., Ltd.
26/F., Ruijin Building, No.205 Maoming Road (S), Shanghai 200020, China
Tel: <86> (21) 6472-1001, Fax: <86> (21) 6415-2952

Renesas Technology Singapore Pte. Ltd.
1, Harbour Front Avenue, #06-10, Keppel Bay Tower, Singapore 098632
Tel: <65> 6213-0200, Fax: <65> 6278-8001

© 2003. Renesas Technology Corp., All rights reserved. Printed in Japan.
Colophon 1.0