AK2389

GSM 1 chip AFE

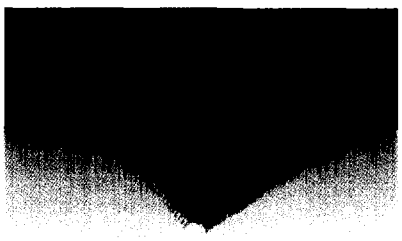

① All analog circuits for GSM AFE
② 13MHz Clock
③ Low voltage (2.7V~5.5V) operation
④ Low power consumption
Powerdown mode supported
⑤ Flexible RF interface
⑥ Package: 100pin TQFP

100pin TQFP (14×14×2.7mm)

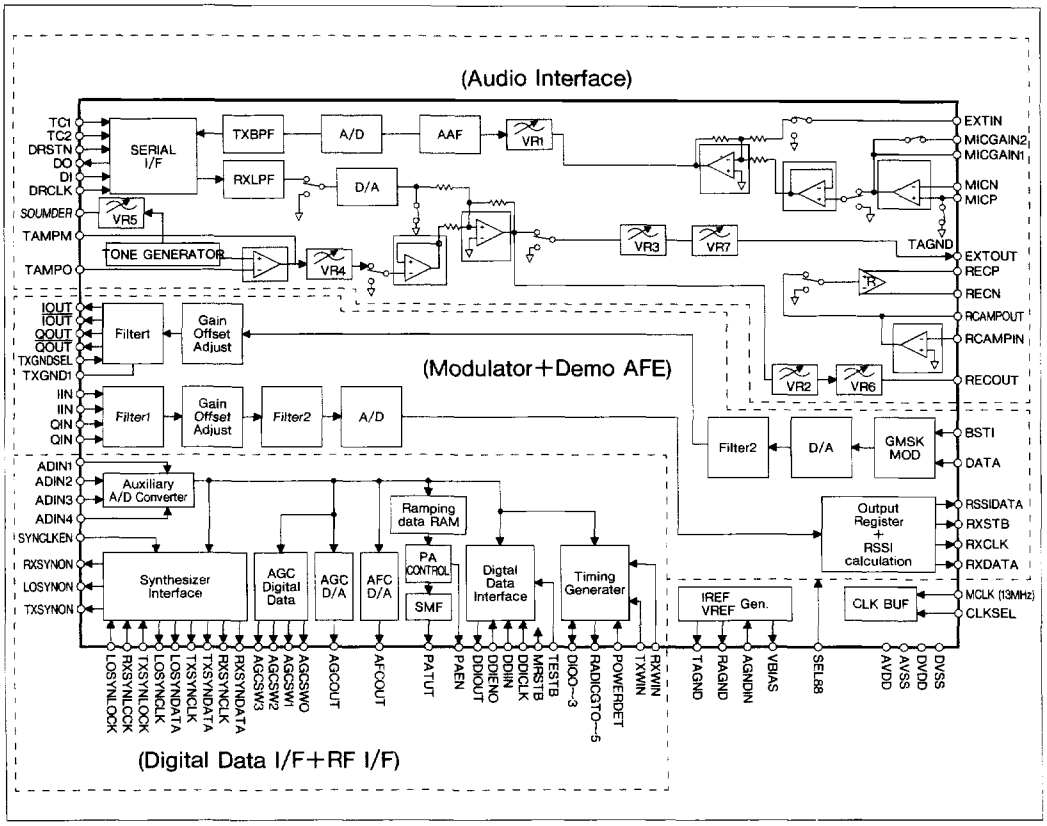

AK2389 BLOCK DIAGRAM