Rev	AWO #	Description	Date	Appr
-		RELEASED	6/28/07	

APPROVED: _____

DATE: _____ TITLE: _____

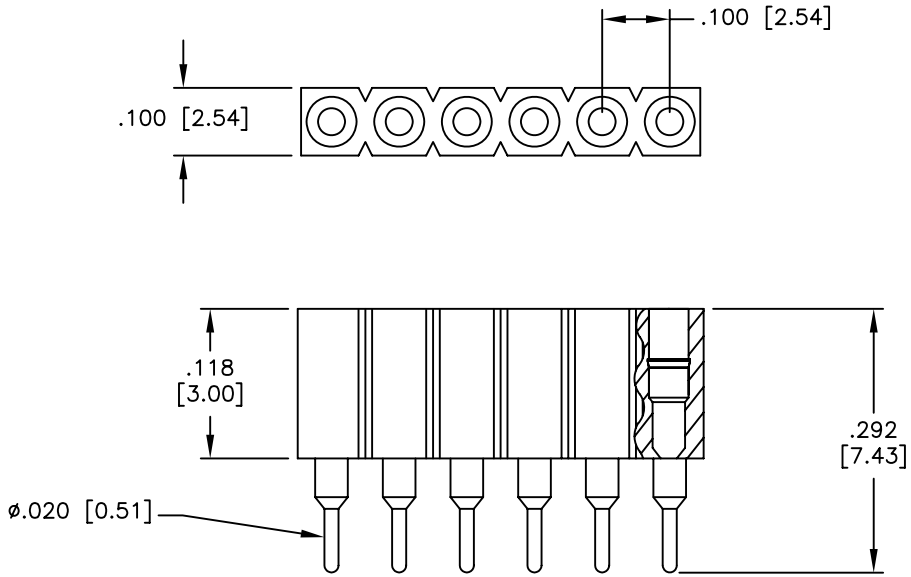

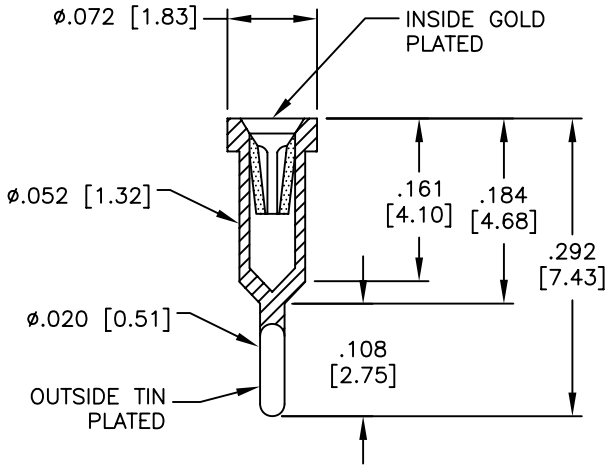

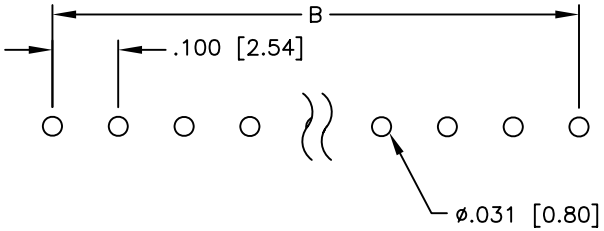

PCB LAYOUT

SPECIFICATIONS:
Material:
Insulator: PPS, Glass reinforced, rated UL 94V-0
Insulator color: Black
Contacts: Phosphor Bronze
Sleeve: Brass
Plating:
Inner contact: Tin over Copper underplate
Outer sleeve: Tin over Copper underplate overall
Electrical:
Operating voltage: 250 VAC max
Current rating: 3 Amp max
Contact resistance: 10 mohms max initial
Insulation resistance: 5,000 Mohms min
Dielectric withstanding voltage: 1000 VAC for 1 minute
Temperature Rating:
Operating temperature: -40°C to +105°C
Environmental:
Lead free, RoHS compliant
Recommended soldering temp: 235°C for 5 seconds

RoHS COMPLIANT

Positions: 1 thru 40
A = .100 [2.54] x No. of Positions
B = .100 [2.54] x No. of Positions -1

UNLESS OTHERWISE SPECIFIED
ALL DIMENSIONS ARE INCHES [MM]
TOLERANCES: EXCEPT AS NOTED

INCHES		HOLES	
.X	± .10	Ø.X	±.10
.XX	± .020	Ø.XX	±.015
.XXX	± .015	Ø.XXX	±.010

APPROVALS		DATE
DRAWN	SS	6/28/07
CHECKED		
APPROVED		

ADAM TECH
909 Rahway Avenue, Union, NJ 07083
Phone: 908-687-5000 Fax: 908-687-5710

TITLE
SCREW MACHINE CONTACT SOCKET
.100" SPACING, GOLD/TIN PLATED

SIZE	PART NO.	REV.
X	SMC-1-XX-1-TT	-

REF: | SCALE: NTS | SHEET 1 OF 1