Rev	AWO #	Description	Date	Appr
-		RELEASED	2/03/10	

APPROVED: _____

DATE: _____ TITLE: _____

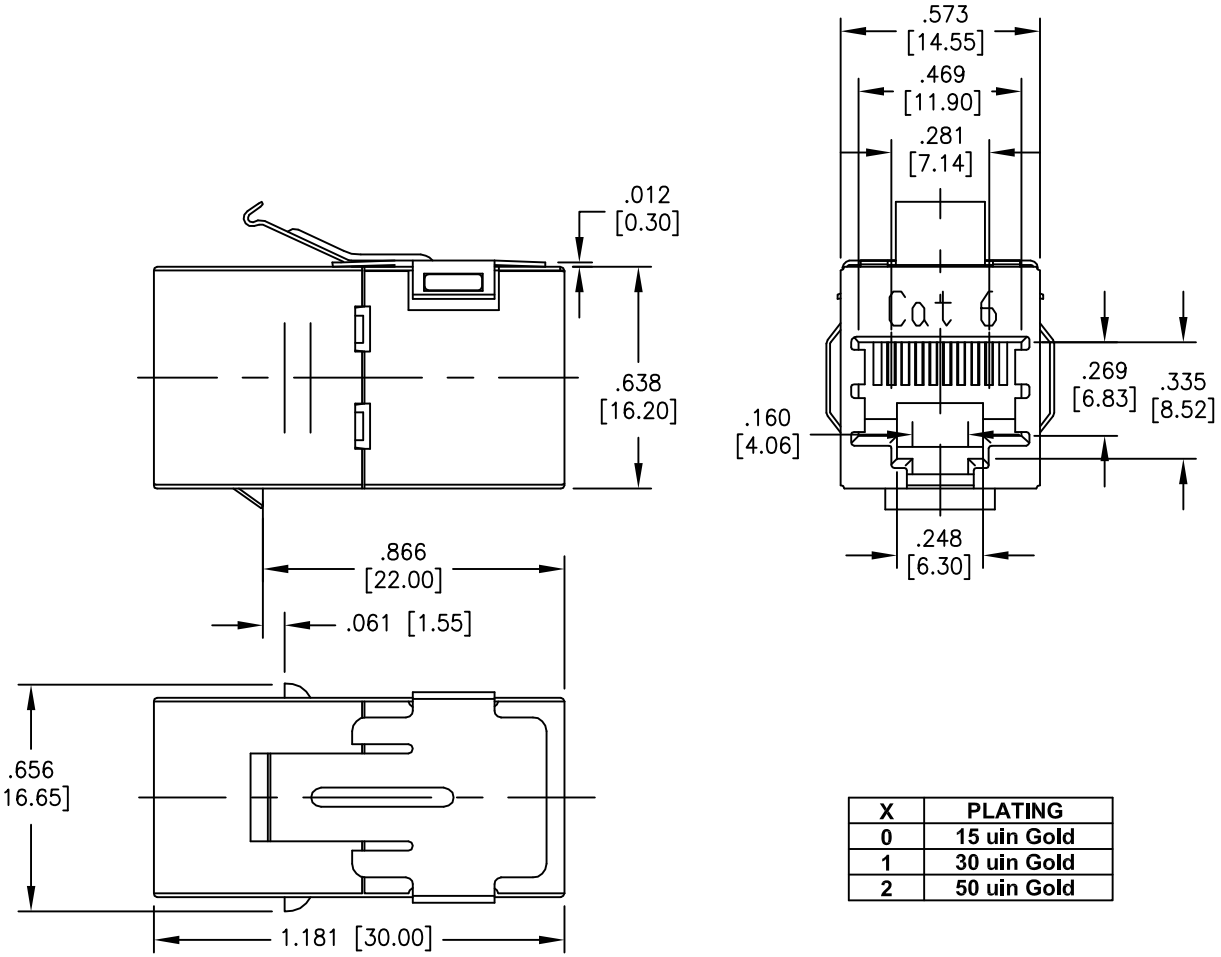

X	PLATING
0	15 uin Gold
1	30 uin Gold
2	50 uin Gold

SPECIFICATIONS:

Material:

Insulator: ABS, rated UL 94V-0

Insulator color: Black

Contacts: Phosphor Bronze

Shield: Stainless Steel

Plating:

Gold over Nickel underplate on contact area,

Tin over Copper underplate between contact areas.

(See Chart for Thickness)

Electrical:

Operating voltage: 125 VAC max.

Current rating: 1.5 Amps max.

Contact resistance: 20 mohms max.

Insulation resistance: 1000 Mohms min. @ 500 VDC

Dielectric withstanding voltage: 1000 VAC for 1 minute

Temperature Rating:

Operating temperature: -55°C to +85°C

Environmenta:

Leade free, RoHS Compliant

RoHS COMPLIANT

UNLESS OTHERWISE SPECIFIED
ALL DIMENSIONS ARE MM [INCHES]
TOLERANCES: EXCEPT AS NOTED

INCHES		HOLES	
.X	± .10	Ø.X	±.10
.XX	± .020	Ø.XX	±.015
.XXX	± .015	Ø.XXX	±.010

APPROVALS		DATE
DRAWN	DY	2/03/10
CHECKED		
APPROVED		

ADAM TECH

909 Rahway Avenue, Union, NJ 07083

Phone: 908-687-5000 Fax: 908-687-5710

TITLE: MODULAR COUPLER, 8P8C TO 8P8C FULLY SHIELDED, CAT6

SIZE	PART NO.	REV.
X	MTJC-88XB-S-CAT6	-

REF: S00005C | SCALE: NTS | SHEET 1 OF 1