# MCX 50 Ohm
# 2-Hole Flange Mount Jack Receptacle - Extended Dielectric

EMERSON
Network Power

INCHES (MILLIMETERS)
CUSTOMER DRAWINGS AVAILABLE UPON REQUEST

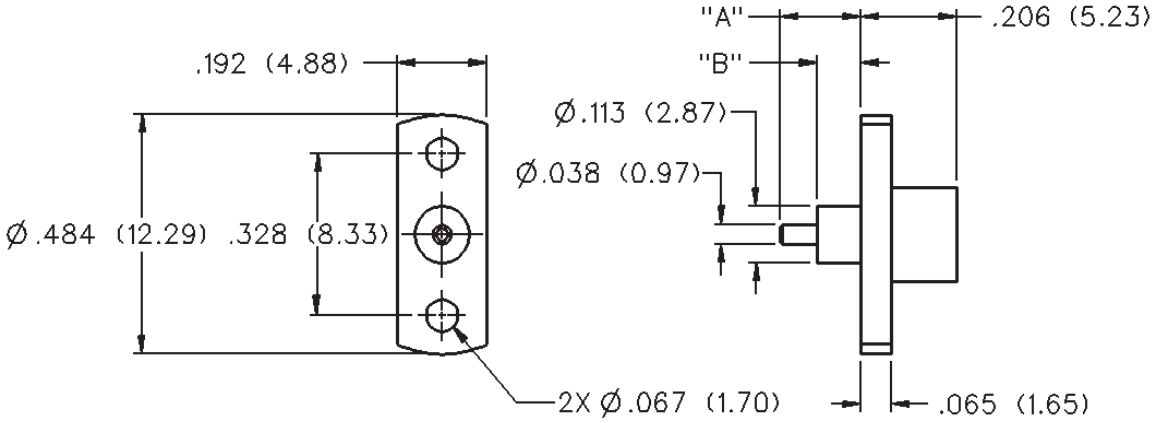


| "A" | "B" | GOLD PLATED | NICKEL PLATED |
|---|---|---|---|
| .300 (7.62) | .200 (5.08) | 133-3701-621 | 133-3701-626 |

# MCX - 50 Ohm Connectors

Specifications

EMERSON Network Power

INCHES (MILLIMETERS)
CUSTOMER DRAWINGS AVAILABLE UPON REQUEST

**ELECTRICAL RATINGS**

**Impedance:** 50 Ohms

**Frequency Range:** Connectors ..... 0-6 GHz
Dummy loads ..... 0-1 GHz

**VSWR:** (f = GHz)

| | Straight Cabled Connectors | Right Angle Cabled Connectors |
|---|---|---|
| RG-178 cable | 1.17 + .04f | 1.07 + .06f |
| RG-316 and .086 semi-rigid cable | 1.13 + .04f | 1.07 + .04f |
| Adapters | | 1.13 + .04f |
| Uncabled receptacles, Dummy loads | | N/A |

**Working Voltage:** (Vrms maximum)†

| Connectors for Cable Type | Sea Level | 70K Feet |
|---|---|---|
| RG-178 | 250 | 65 |
| RG-316, .086 semi-rigid uncabled uncabled receptacles, adapters | 335 | 85 |
| Dummy loads | | N/A |

**Dielectric Withstanding Voltage:** (VRMS minimum at sea level)
Connectors for RG-178 ..... 750
Connectors for RG-316, .086 semi-rigid, uncabled receptacles, adapters ..... 1000
Dummy loads ..... N/A

**Corona Level:** (Volts minimum at 70,000 feet)
Connectors for RG-178 ..... 190
Connectors for RG-316, .086 semi-rigid uncabled receptacles, adapters ..... 250
Dummy loads ..... N/A

**Insertion Loss:** (dB maximum, tested at 1 GHz)
Straight cable connectors and adapters ..... 0.1 dB
Right angle cable connectors ..... 0.2 dB
Uncabled receptacles, dummy loads ..... N/A

**Insulation Resistance:** 10,000 megohms minimum

**Contact Resistance:** (milliohms maximum)

| | Initial | After Environmental |
|---|---|---|
| Center contact (straight cabled connectors, uncabled receptacles and adapters) | 5.0 | 8.0 |
| Center contact (right angle cabled connectors) | 5.0 | 15.0 |
| Outer contact | 1.0 | 1.5 |
| Braid to body (gold plated connectors) | 1.0 | N/A |
| Braid to body (nickel plated connectors) | 2.5 | N/A |

**RF Leakage:** (dB typical tested at 2.5 GHz)
Cable connectors ..... -55 dB
Uncabled receptacles and adapters, dummy loads ..... N/A

Avoid user injury due to misapplication. See safety advisory definitions on page 2.
** All gold plated parts include a .00005" min. nickel underplate barrier layer.

**RF High Potential Withstanding Voltage:** (Vrms minimum, tested at 4 and 7 MHz)
Connectors for RG178 ..... 500
Connectors for RG316 and adapters ..... 700
.086 semi-rigid ..... 670
Uncabled receptacles ..... 600
Dummy loads ..... N/A

**Power Rating (Dummy Load):** 0.5 watt @ +25°C, derated to 0.25 watt @ +125°C

**MECHANICAL RATINGS**

**Engagement Design:** Compatible with CECC 22220, Series MCX

**Engagement Force:** 5.6 pounds maximum axial force

**Disengagement Force:** 8 pounds maximum axial force, 1 pound min.

**Contact Retention:** 2.3 pounds min. axial force (captivated contacts)
1 inch-ounce min. torque (uncabled receptacles)

| Cable Retention: | Axial Force* (pounds) | Torque (in-oz) |
|---|---|---|
| Connectors for RG178 | 10 | N/A |
| Connectors for RG316 | 20 | N/A |
| Connectors for RG316DS | 25 | N/A |
| Connectors for .086 semi-rigid | 30 | 16 |

* or cable breaking strength whichever is less.

**ENVIRONMENTAL RATINGS (Meets or exceed the applicable paragraph of MIL-C-39012)Durability:** 500 cycles minimum

**Temperature Range:** Connectors ..... - 65°C to + 165°C
Dummy loads ..... - 65°C to + 125°C

**Thermal Shock:** MIL-STD-202, Method 107, Condition F (N/A dummy loads)

**Corrosion:** MIL-STD-202, Method 101, Condition B (N/A dummy loads)

**Shock:** MIL-STD-202, Method 213, Condition B (N/A dummy loads)

**Vibration:** MIL-STD-202, Method 204, Condition B (N/A dummy loads)

**Moisture Resistance:** MIL-STD-202, Method 106 (N/A dummy loads)

**MATERIAL SPECIFICATIONS**

**Bodies:** Brass per QQ-B-626 or zinc per ASTM B86-71, gold plated** per MIL-G-45204 .00001" min or nickel plated per QQ-N-290 or bright tin plated

**Contacts:** Male - brass per QQ-B-626, gold plated per MIL-G-45204 .00003" min.
Female - beryllium copper per QQ-C-530, gold plated per MIL-G-45204 .00003" min.

**Insulators:** PTFE fluorocarbon per ASTM D 1710 and ASTM D 1457

**Expansion Caps:** Brass per QQ-B-613, gold plated per MIL-G-45204 .00001" min. or nickel plated per QQ-N-290

**Crimp Sleeves:** Copper per WW-T-799, gold plated per MIL-G-45204 .00001" min. or nickel plated per QQ-N-290

**Mounting Hardware:** Brass (nuts) per QQ-B-626 or phosphor bronze (lockwashers) QQ-B-750, gold plated per MIL-G-45204 .00001" min. or nickel plated per QQ-N-290

**MATING ENGAGEMENT FOR MCX SERIES COMPATIBLE WITH CECC 22220**

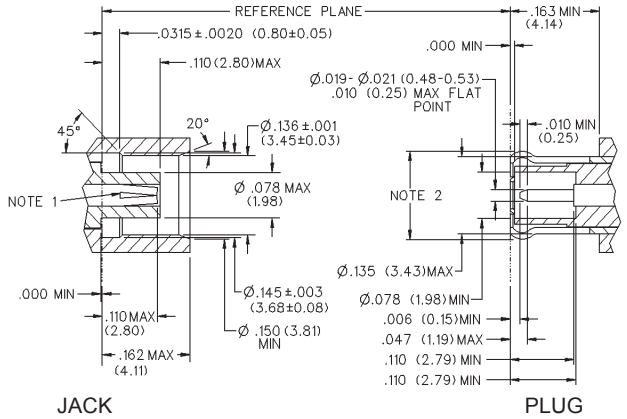


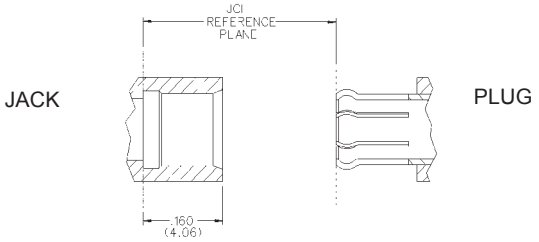


**NOTES**

1. ID of contact to meet VSWR mating characteristics and connector durability when mated with a dia. .019-.021 (0.48-0.53) male contact.
2. Must meet the force to engage and disengage when mated with mating part.


**Emerson Network Power Connectivity Solutions**
299 Johnson Avenue SW, Waseca, MN 56093 • 800 -247- 8256 • +1 (507) 833-8822 • www.EmersonConnectivity.com