March 1992
Edition 1.0A

FUJITSU

PRODUCT PROFILE

MB501UL

Low Power and Low Voltage Two-modulus Prescaler

The Fujitsu MB501UL is an ultimate low-power version of MB501LV, a two modulus prescaler. It is used in phase locked loop (PLL) frequency synthesizers to divide the input frequency by the modulus of 64/65 or 128/129, respectively. The use of Fujitsu's Advanced Process Technology provides the benefits of extremely small stray capacitance on the chip. As a result, the high-speed operation of the MB501UL is achieved with a low power supply current of 1.9 mA (typical), or about 1/6 the value of the MB501LV (12 mA) and less than 1/2 the value of the MB501SL (5 mA).

PRELIMINARY

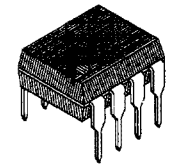

Plastic DIP Package
(DIP-8P-M01)

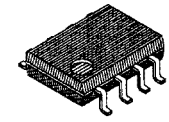

Plastic SOP Package
(FPT-8P-M01)

- High frequency operation: fmax = 1.1 GHz max.
- Pulse swallow function: 64/65, 128/129
- Low power supply current: 1.9 mA typical
- Stable output amplitude: 1.1 V_{PP} typical
- Wide operating temperature: –40 to +85 °C
- Built1-in terminal resistor
- Complete PLL synthesizer circuit with Fujitsu MB87001A, PLL synthesizer IC
- Package and ordering information:
  – 8-pin plastic DIP, order as MB501ULP
  – 8-pin plastic SOP, order as MB501ULPF

Pin Assignment

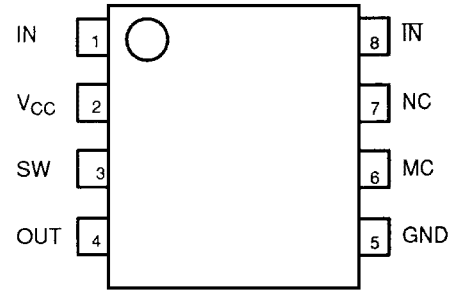

ABSOLUTE MAXIMUM RATINGS

Rating	Symbol	Value	Unit
Supply Voltage	V_{CC}	+0.5 to +4.0	V
Input Voltage	V_{IN}	–0.5 to V_{CC}	V
Output Current	I_O	10	mA
Storage Temperature	T_{STG}	–55 to +125	°C

— NOTICE —

Permanent device damage may occur if absolute maximum ratings are exceeded. Functional operation should be restricted to the conditions as detailed in the operation sections of this data sheet. Exposure to absolute maximum rating conditions for extended periods may affect device reliability.

This device contains circuitry to protect the inputs against damage due to high static voltages or electric fields. However, it is advised that normal precautions be taken to avoid application of any voltage higher than maximum rated voltages to this high impedance circuit.

©1992 by FUJITSU LIMITED and Fujitsu Microelectronics, Inc.

BLOCK DIAGRAM

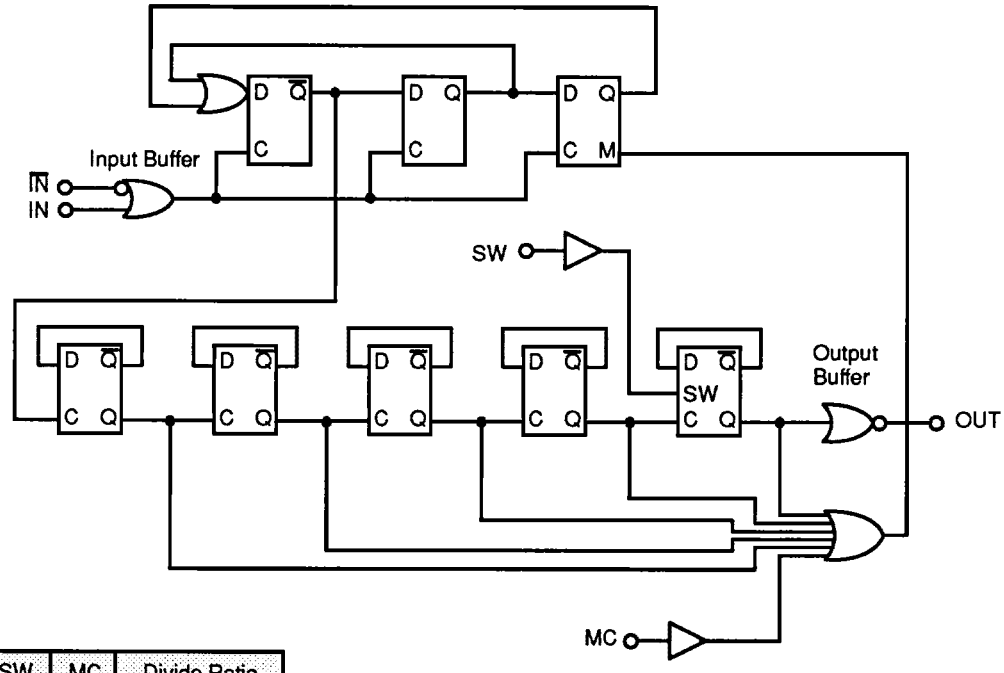

	SW	MC	Divide Ratio
MB501UL	H	H	1/64
	H	L	1/65
	L	H	1/128
	L	L	1/129

Note; SW : H = Vcc L = open
MC : H = 2.0V to Vcc
L = GND to 0.8V

PIN DESCRIPTION

Pin No.	Symbol	Function
1	IN	Input
2	V_{CC}	DC Supply Voltage
3	SW	Divide Ratio Control Input
4	OUT	Output
5	GND	Ground
6	MC	Modulus Control Input
7	NC	No Connection
8	$\overline{IN}$	Complementary Input

RECOMMENDED OPERATING CONDITIONS

Parameter	Symbol	Value			Unit
		Min.	Typ.	Max.	
Supply Voltage	Vcc	2.7	3.0	3.3	V
Output current	Io		1.2		mA
Ambient Temperature	Ta	–40		+85	°C
Load Capacitance	CL			8pF	pF

ELECTRICAL CHARACTERISTICS

Parameter	Symbol	Conditions	Value			Unit
			Min.	Typ.	Max.	
Power Supply Current	Icc	Vcc = 3.0V		1.9	2.9	mA
Output Amplitude	Vo		0.8	1.1		V
Input Frequency	f_{IN}	1000pF Coupling			1100	MHz
Input Signal Amplitude	V_{IN}		–15		–5	dBm
High Level Input Voltage For MC Input	V_{IHM}	V_{IHM} = 1/2 Vcc + 0.3	V_{IHM}			V
High Level Input Voltage For MC Input	V_{ILM}				0.8	V
High Level Input Voltage For SW Input	V_{IHS}		Vcc–0.1	Vcc	Vcc + 0.1	V
High Level Input Voltage For SW Input	V_{ILS}		OPEN			V
High Level Input Current For MC Input	I_{IHM}	V_{IH} = 2.0V			0.4	mA
High Level Input Current For MC Input	I_{ILM}	V_{IL} = 0.8V	–0.2			mA
Modulus Set-up time MC to OUT	t_{SET}			16	26	ns

PACKAGE DIMENSIONS

8-LEAD PLASTIC DUAL IN-LINE PACKAGE
(CASE No.: DIP-8P-M01)

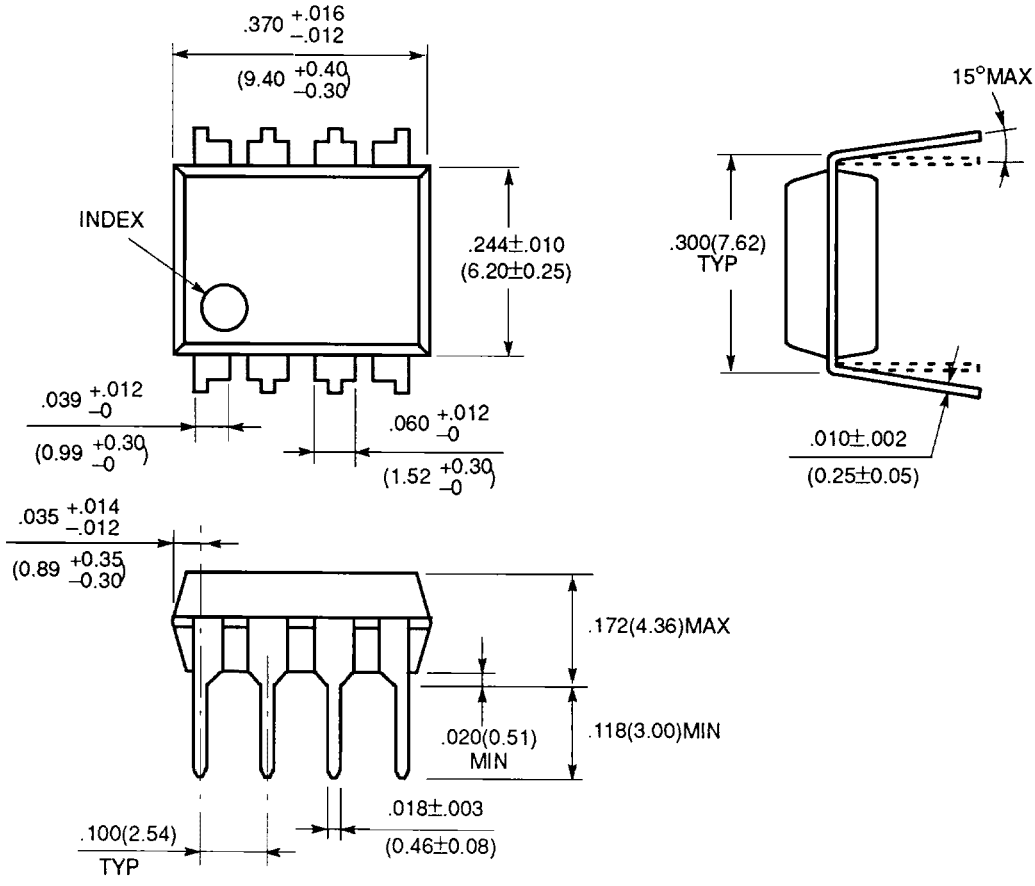

©1991 FUJITSU LIMITED D08006S-2C

Dimensions in
inches (millimeters)

PACKAGE DIMENSIONS

8-LEAD PLASTIC FLAT PACKAGE
(CASE No.: FPT-8P-M01)

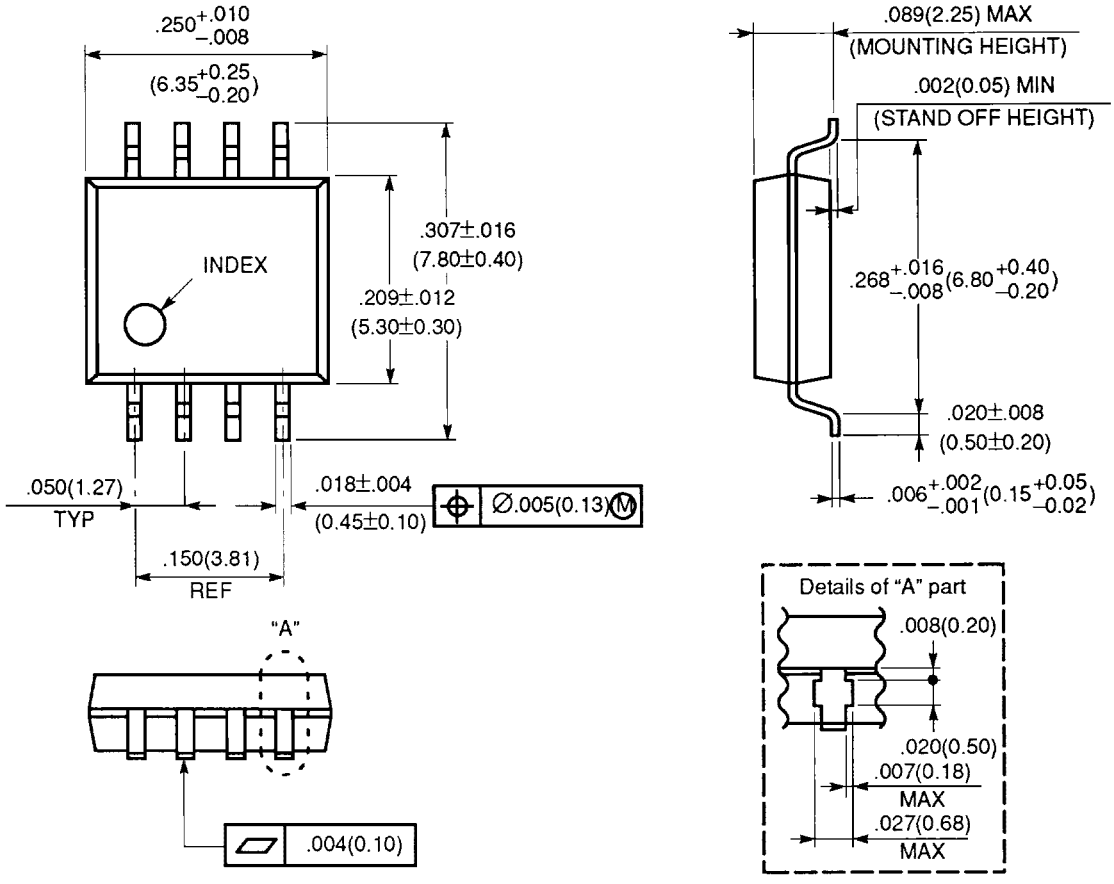

©1991 FUJITSU LIMITED F08002S-4C

Dimensions in inches (millimeters)

All Rights Reserved.

Circuit diagrams utilizing Fujitsu products are included as a means of illustrating typical semiconductor applications. Complete Information sufficient for construction purposes is not necessarily given.

The information contained in this document has been carefully checked and is believed to be reliable. However, Fujitsu assumes no responsibility for inaccuracies.

The information contained in this document does not convey any license under the copyrights, patent rights or trademarks claimed and owned by Fujitsu.

Fujitsu reserves the right to change products or specifications without notice.

No part of this publication may be copied or reproduced in any form or by any means, or transferred to any third party without prior written consent of Fujitsu.

FUJITSU LIMITED

For further information, please contact:

Japan

FUJITSU LIMITED
Integrated Circuits and Semiconductor Marketing
Furukawa Sogo Bldg.
6-1, Marunouchi 2-chome
Chiyoda-ku, Tokyo 100
Japan
Tel: (03) 3216-3211
Telex: 781-2224361
FAX: (03) 3211-3987

Europe and Africa

FUJITSU MIKROELEKTRONIK GmbH
Am Siebenstein 6-10
6072 Dreieich - Buchschlag
Germany
Tel: (06) 103-6900
Telex: 411963
FAX: (06) 103-690122

Asia, Australia, and Oceania

FUJITSU MICROELECTRONICS ASIA PTE LIMITED
06-04/07 Plaza by the Park
No. 51 Bras Basah Road
Singapore 0718
Tel: (65) 3361600
FAX: (65) 336-1609

North and South America

FUJITSU MICROELECTRONICS, INC.
Integrated Circuits Division
3545 North First Street
San Jose, CA 95134-1804 USA
Tel: (408) 922-9000
FAX: (408) 432-9044

©1992 FUJITSU LIMITED and Fujitsu Microelectronics, Inc.
Printed in USA

IC-08398-1-92-DS