NATEL

HDSR2514

Digital-to-Synchro/Resolver Converter High Accuracy 14-bit Hybrid

Features

- **Single 36-pin hybrid DDIP package**
- **1 arc-minute accuracy**
- **0.03% max scale factor variation** (sin, cos conformance)
- **4-quadrant digital to sin/cos conversion**
- **dc-coupled reference and outputs**
- **Pin-programmable synchro or resolver output**
- **Pin-programmable reference input** (for 1.3, 26 and 115 V-rms)
- **Resistor-programmable** (for non-standard reference)
- **Requires only ± 15-V power supplies**
- **TTL and CMOS compatible**
- **Hi rel MIL-STD-883B processing**
- **Priced at $355/USA single unit price** (HDSR2514-14S)

255 orig

006392

6392 NTL

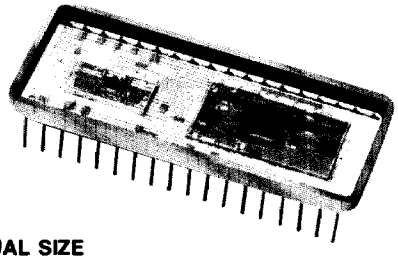

ACTUAL SIZE

Applications

Polar to rectangular coordinate conversion
Missile and fire control systems
Flight instrumentation
Simulation systems
Digital phase shifting
Rotating PPI sweep
Radar and navigational systems
Axis rotation

Description

The HDSR2514 is a second generation, lower cost version of the Natel Model 2504 — a versatile 4-quadrant multiplying digital-to-synchro/resolver converter. The output can be configured to provide either sin, cos outputs (resolver format) or S1, S2, S3 outputs (synchro format) by external pin-programming.

One of the outstanding features of the converter is its radius accuracy of ±0.03%. Low transformation error makes the HDSR2514 an ideal choice for applications requiring independent sine and cosine accuracies. Certain closed-loop control systems, coordinate transformation and PPI (sweep) displays are examples of such applications.

Packaged in a standard 36-pin DDIP, the converter does not require a +5-V logic supply. The digital inputs are TTL and 5-V CMOS compatible, internally derived logic thresholds are 0.8 V-dc for a logic "low" and 2.4 V-dc for a logic "high."

All data bits (B1 through B14) are actively pulled to ground. If the converter requires less than 14-bit resolution unused pins of data bits may be left open.

Reference voltages of either 115, 26 or 1.3 V-rms are selected by pin programming, without any requirement for external resistors. For non-standard voltages, the converter can be programmed using two external resistors.

Model HDSR2514 converters are available with angular accuracies of 1, 2 and 4 arc-minutes. These accuracies are guaranteed over the specified operating temperature range. The exceptionally high accuracy of these converters is achieved by a unique design approach that uses buffer amplifier circuits to eliminate the effects of analog switch resistance instead of requiring special compensation circuits. Matched thin film resistors are used at the Reference input and Synchro/Resolver outputs to assure excellent performance over the operating temperature range. All gain resistors are actively laser trimmed to achieve precise performance.

Although pin-compatible digital-to-synchro/resolver converters are available in the industry, they do not offer the high angular accuracy and operational flexibility provided by the HDSR2514. Moreover, the converter offers vector accuracy that is a factor of 4 improvement over previously available hybrid digital-to-synchro/resolver converters.

Theory of Operation

Operation of the model HDSR2514 is illustrated in the block diagram of figure 1. The reference voltage is applied to a differential amplifier to obtain a low level buffered reference. A digital input word representing the angle in natural binary format is applied to the input buffers.

The two most significant bits (Bit 1 = 180°, Bit 2 = 90°) determine the quadrant information. Bits 3 through 14, containing angular information together with the buffered reference voltage, are applied to two function generators. Operation of the function generators is very similar to a 4-quadrant multiplying DAC. Like a conventional DAC, the 2514 uses resistive ladder networks and solid state switching to control the attenuation of the reference voltage. The ladder networks, however, are designed to attenuate the input reference proportional to the sine and cosine of the digital input angle. Outputs of the function generators are applied to a quadrant select network. The outputs of the quadrant select circuit are sin θ and cos θ which are then applied to a scott-tee and resolver buffer circuit. The output conditioning circuit is configured to allow pin-programming for either synchro or resolver output.

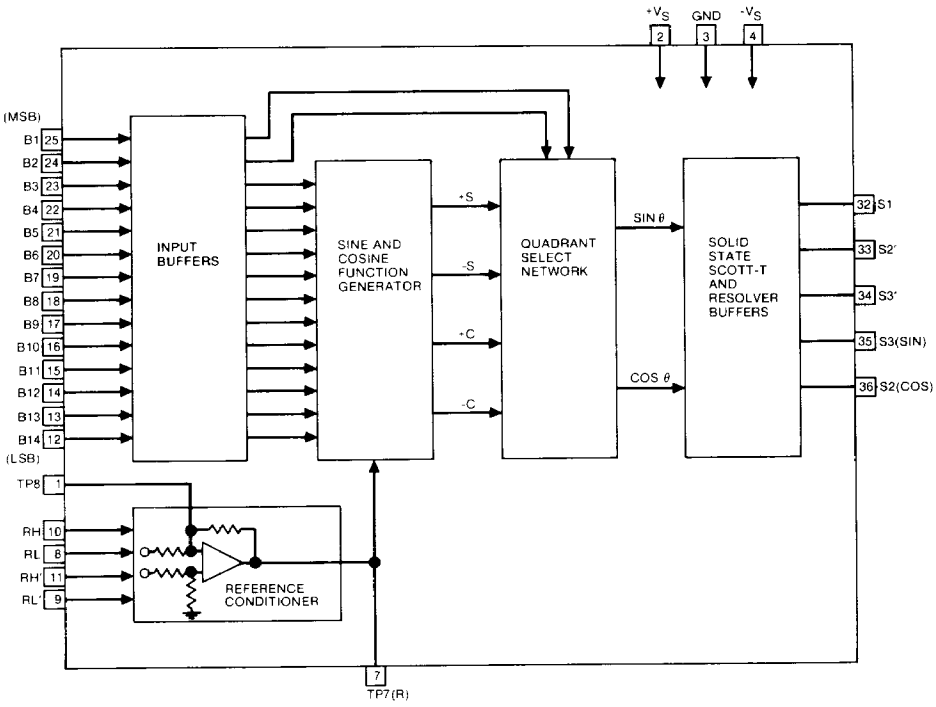

FIGURE 1 Block Diagram Model HDSR2514

Pin Designations

B1 - B14	Parallel Data Input Bits B1 is MSB = 180 degrees B14 is LSB = 0.022 degrees
RH, RL, RH', RL'	Reference Voltage Input - Pin programmable for 1.3, 26 and 115V-rms inputs (see text for connections)
$+V_S$, $-V_S$	Supply Voltages Typically ±15 V-dc
GND	Power Supply Ground Digital Ground Analog Signal Ground
TP1 - TP6	Test Points - (For factory use only)
TP7 (R)	Buffered Reference Voltage - Nominal output 2.27 V-rms for standard reference Voltages.
TP8	Test Point - Do not connect, used for other applications.
S1, S2, S3, S2', S3'	Output Analog Signal Pin programmable for Synchro or Resolver output (see text for connections)

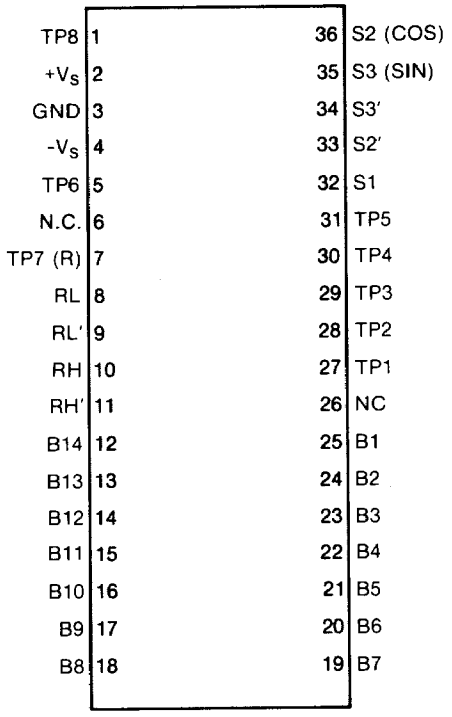

FIGURE 2 HDSR2514 Pin Assignments

Specifications

PARAMETER	VALUE	REMARKS
Digital Angular Resolution	14 bits (1.32 arc-minutes)	MSB = 180°, LSB = 0.022°
Accuracy	±4 arc-minutes (option S) ±2 arc-minutes (option H) ±1 arc-minute (option V)	Accuracy applies over operating temp. range
Scale Factor Variation (Transformation ratio Error)	±0.03% maximum	Simultaneous amplitude variation in all output lines as a function of digital angle.
Output Settling time	20 μsec maximum to accuracy of the converter	For any digital step change
Reference Input Internal Resistors External Resistors Frequency Range	 Pin-programmable for 1.3, 26 and 115 V-rms (±10%) Programmable for voltages > 1.3 V-rms by adding two external resistors dc to 1000 Hz (option 4) dc to 5 kHz (option 5)	 Differential Solid State Input See Reference level adjustment
Input Impedance RH - RL RH' - RL' **Common Mode Voltage Range** 26 V-rms (RH-RL) 115 V-rms (RH-RL) 1.3 V-rms (RH'-RL') **Common Mode Rejection Ratio**	 Differential 200 k Ω±0.25% Single Ended 100 k Ω±0.25% Differential 10 k Ω±0.25% Single Ended 5 k Ω±0.25% ±80 V peak maximum ±200 V peak maximum ±4 V peak maximum 50 dB minimum	 RH', RL' unterminated RH', RL' connected to GND RH, RL Unterminated
Analog Outputs		Using Internal Resistors
Synchro Format Resolver Format "R" Output Output Current DC Offset	11.8 V-rms line-to-line ±0.2% 6.81 V-rms ±0.2% 2.27 V-rms Nominal 2 mA-rms maximum ±10 mV typical, ±25 mV maximum	S1, S2, S3 outputs Sin, Cos outputs Short circuit proof
Digital Inputs **Logic Voltage Levels**		CMOS transient protected
Logic "0" Logic "1"	−0.3 V-dc to 0.8 V-dc +2.4 V-dc to +5.5 V-dc	Does not need external logic voltage 0.1 TTL Load
Input Currents		
Data Bits (B1-B14)	15 μA typical, "active" pull down to Ground (GND)	For less than 14-bits input, unused pins can be left unconnected
Power Supplies		
Supply voltages ($\pm V_S$) Supply Currents Supply Rejection	±15 V-dc ±5% ±25 mA maximum 80 dB typical	Without output clipping for nominal ac voltages
Physical Characteristics		
Type Size Weight	36 PIN Double DIP 0.78 x 1.9 x 0.21 inch (20 x 48 x 5.3 mm) 0.6 oz. (17 g) max.	 3 standoffs are added to the package to insulate it from printed circuit board traces. (Standoffs included in 0.21-inch height dimension.)

Absolute Maximum Ratings

Reference Input ..... Twice specified Voltage
Power Supply Voltages ($\pm V_S$) ..... ±18 V-dc
Digital Inputs ..... −0.3 V-dc to +6.5 V-dc
Storage Temperature ..... −65°C to +135°C

Although Digital inputs are CMOS protected, storage in conductive foam is recommended.

When installing on or removing the converter from printed circuit boards or sockets, it is recommended that the power supply be turned off. Decoupling capacitors are recommended on the $+V_S$ and $-V_S$ supplies. A 1μF tantalum capacitor in parallel with 0.01 μF ceramic capacitor should be mounted as close to the supply pins as possible.

Caution: Reversal of $+V_S$ and $-V_S$ power supply connections will result in permanent damage to the converter.

Reference Level Adjustment

Operation of the HDSR2514 is very similar to that of a multiplying digital-to-analog converter. The sine and cosine outputs are directly proportional to and have the same waveform as the reference voltage. Any distortion or harmonics present at the reference will appear at the output lines.

Internal resistors permit pin-programming for three standard reference voltages with the normal analog output (6.81 V-rms for Resolvers and 11.8 V-rms for Synchros). The connections for the three reference voltages — 1.3 V-rms, 26 V-rms and 115 V-rms — are shown in figure 3. Proportionally higher or lower voltages will be obtained for analog outputs when higher or lower reference voltages are used.

To obtain nominal analog output with non-standard reference voltages, two external resistors are required. The input resistance for RH and RL is 100 kΩ. RH′ and RL′ are each 5 kΩ. The circuit configuration for reference voltages other than nominal is shown in figure 4.

For high reference voltages (26 to 115 V-rms), the resistor values for R1 might become too large to be practical. In those situations the external resistor should be connected as shown in figure 5.

For reference voltages greater than 115 V-rms the external resistors should be connected as shown in figure 6.

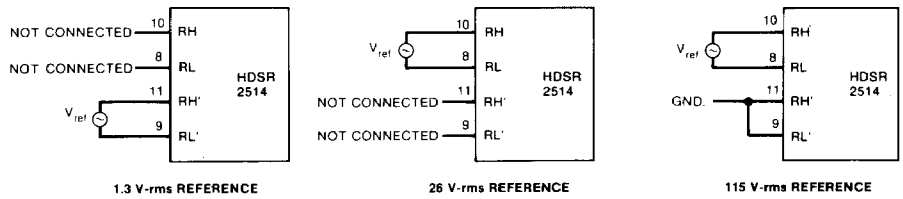

FIGURE 3

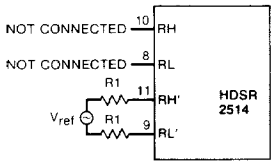

$$R1 = \frac{5}{1.3}(V_{ref} - 1.3)\ \text{K Ohms}$$

V_{ref} (V-rms)	2	3	5	7	10	13	16	20	25
R1 (K Ohms)	2.69	6.54	14.23	21.92	33.46	45.00	56.54	71.92	91.15

FIGURE 4 V_{ref} = 1.3 V-rms to 26 V-rms

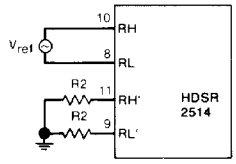

$$R2 = \left(\frac{97.54}{V_{ref} - 26} - 1.096\right)\ \text{K Ohms}$$

V_{ref} (V-rms)	30	40	50	60	70	80	90	100	110
R2 (K Ohms)	23.28	5.87	2.97	1.77	1.12	0.710	0.428	0.222	0.065

FIGURE 5 V_{ref} = 26 V-rms to 115 V-rms

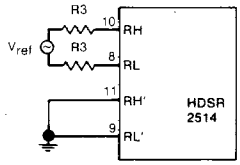

$$R3 = (0.8558\ V_{ref} - 98.417)\ \text{K Ohms}$$

V_{ref} (V-rms)	120	130	140	150	160	170	180	190	200
R3 (K Ohms)	4.28	12.84	21.40	29.95	38.51	47.07	55.63	64.19	72.74

FIGURE 6 V_{ref} Greater than 115 V-rms

Synchro/Resolver Connections — Output Phasing and Gain

The connections for synchro and resolver outputs are shown in figure 7. For standard reference voltages, the gain of the converter is factory adjusted to provide voltages of 6.81 V-rms for maximum sine and cosine outputs in the resolver configuration and 11.8 V-rms in the synchro configuration. The gain accuracy using internal resistors is ±0.2%. Applications requiring exact gain can be accomodated by using external resistors (see Reference Adjustment). Contact factory for gain accuracies of better than ±0.2%, if it is not practical to use external resistors.

With ±15-V supply voltages, clipping of the output waveform will occur if the reference amplitude exceeds the specified value by more than 10%

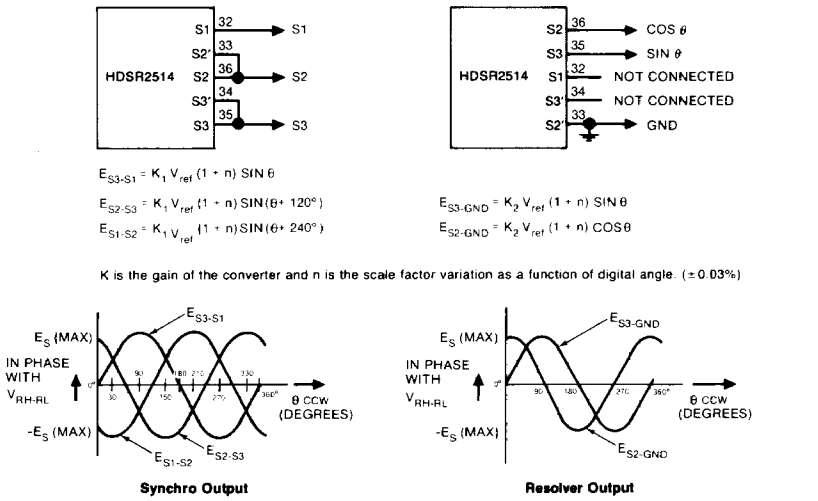

FIGURE 7 Synchro/Resolver Outputs

Digital Phase Shifter with Quadrature output.

Two HDSR2514s can be configured with external operational amplifiers to construct a precision digital phase shifter with in-phase (I) and quadrature (Q) outputs. Figure 8 shows the system to implement this function. If the digital angle θ is made to vary with time, modulation of the carrier signal can be accomplished. The I and Q outputs are phase-shifted replicas of the input carrier signal where the phase angle is the digital input angle, θ.

One interesting use for this phase shifter is in the frequency response testing of feedback control systems. The phase shift of the device under test can be measured on an oscilloscope by comparing the output from the system with the phase-shifted output from the circuit of figure 8. For each reading, the digital input (θ) is adjusted until the phase shift of the two signals are equal as seen on the oscilloscope. The digital angle (θ), then represents the system phase shift.

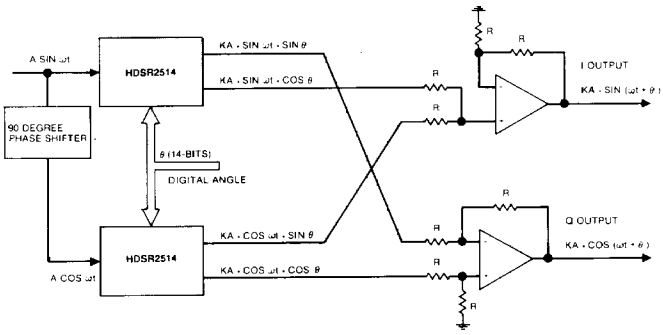

FIGURE 8 Precision Phase Shifter

Low Frequency sine wave Oscillator:

A low frequency sine wave oscillator with very low distortion can be made by using an HDSR2514 in the resolver mode. A circuit for a low frequency oscillator with quadrature output is shown in figure 9. The peak amplitude of the output sine wave is determined by the dc reference voltage (V_{ref}), resistor "R" and connections used (see reference level adjustment).

With a square wave oscillator frequency of 16,384 Hz, an output frequency of 1 Hz is obtained. An ultra low frequency oscillator can be obtained by first dividing the square wave (or pulse generator) output by using digital dividing circuits. For example CD4045 or CD4060 or any other similar counter may be used as dividing circuit. Using such circuits frequency like 1 cycle per day become practical. The purity of sinewave output and quadrature signal (cos output) is proportional to the accuracy of HDSR2514.

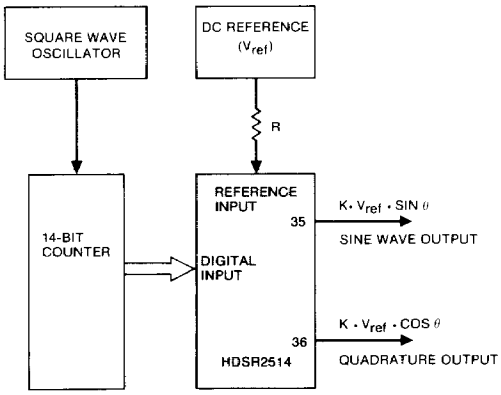

FIGURE 9 A Low Frequency Sinewave Oscillator

Doppler Radar Signal Processor:

One of the interesting applications of the low frequency oscillator described above is for DOPPLER RADAR SIGNAL PROCESSING. Doppler radars are used when there is a requirement to detect moving targets against a stationary background. When the radar receiver is mounted on a non-stationary platform or when the background clutter is in motion due to wind action, frequency correction to the received signal must be introduced to reduce the interference due to the apparent motion of the clutter and thus improve the detectability of targets.

Using the low frequency oscillator discussed above, with a variable frequency square wave, figure 10 shows a precise means for introducing the required modulating frequency in quadrature. The received signal frequency (target + clutter) is shifted in a doubly balanced modulator until the clutter is reduced to minimum visibility to the radar operator, i.e., the frequency shift, $\frac{f_m}{2^{14}}$, is adjusted to exactly cancel the clutter frequency, f_c.

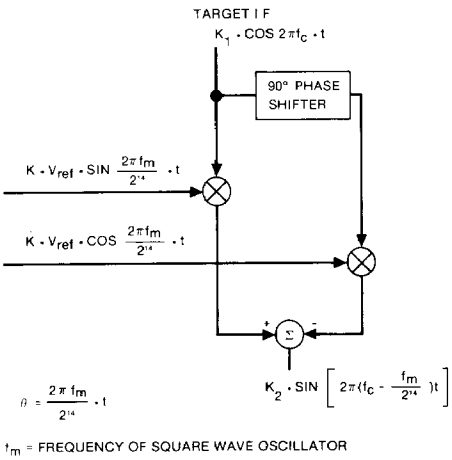

FIGURE 10 A Doppler Radar Signal Processor

Resolver Computing Circuits

The small physical size and high accuracy of the HDSR2514 converter make it a practical choice for flight control systems, missile seekers, and tracking systems where many coordinate rotations and transformations are required. The computations, if carried out by microcomputer, are time consuming and complex, whereas the converter approach requires very little hardware and the response time is limited only by the slew rate of the operational amplifiers used. Transformer coupling may also be used and, in fact, by appropriately interconnecting transformers and HDSR2514s, complete resolver computing chains can be developed to solve a wide variety of coordinate conversion and transformation problems.

Two HDSR2514s connected as shown in figure 11 are the solid state equivalent of an electromechanical resolver of figure 12. While rivaling the accuracy of its electromechanical counterpart it eliminates the mechanical complexity of such systems and, since it is self-buffering, does not require the buffer amplifiers normally encountered in resolver computing chains.

Figure 13 shows a convenient shorthand notation for representing the computing resolver in a resolver chain computation. When representing the circuit of figure 11 it is understood that this notation includes the entire circuit and that the angle input is in digital form.

All basic vector operations such as resolution, coordinate rotations, coordinate transformations, etc. can be carried out using this basic circuit. Coupling transformers are employed as this method of summing and differencing the differential outputs of the D/R converter offers better accuracy than operational amplifier summing and does not propagate dc offsets through the computation. The transformation ratio of the converter must be taken into account in these circuits to preserve the scale factor throughout the computation.

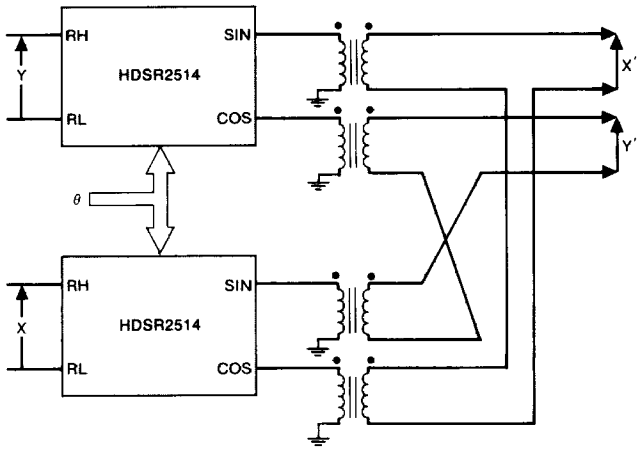

FIGURE 11 2 HDSR2514s Connected as Computing Resolver

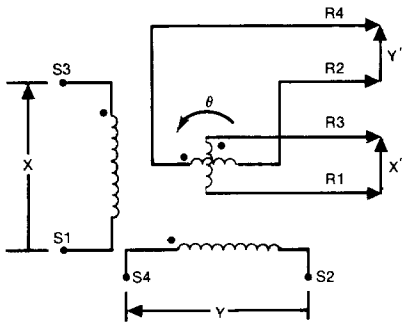

FIGURE 12 Computing Resolver Schematic

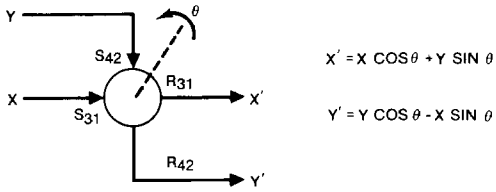

FIGURE 13
Computing Resolver Notation for Circuits of Figures 11 and 12

Stabilizing Inertial Platform

Figure 14 shows a resolver computation network to solve the problem of stabilizing an inertial platform undergoing motion about its azimuth, elevation, roll, and pitch axes. Such a system might be applied to controlling the stabilization vanes on a modern ship or a helicopter-mounted TV camera used for the evening news. The system performs the vector resolution and coordinate transformations required to maintain the platform at a constant inertial position.

In this example resolver networks 1 and 2 perform the vector resolutions of the platform azimuth θ_{AZ}, and the platform elevation, θ_{EL}, into their components in the X, Y and X, Z planes of the defining coordinate system. Resolvers 3 and 4 perform the coordinate transformation to the new coordinate system tilted by the roll angle, θ_R, and the pitch angle θ_P.

Finally the transformed vectors Y_2, Z_1 and X_2, Z_2 undergo vector composition to generate the stabilized azimuth, θ'_{AZ}, and elevation θ'_{EL} platform commands. The Resolver-to-Digital (R/D) converter (Natel Model HSRD1006) operating in conjunction with resolver network 5 computes both the stabilized azimuth angle and the vector R_2 required to calculate the stabilized elevation angle, θ'_{EL}. From the notation in figure 13, resolver network 5 solves the equation:

$$X' = X_2 \cos \theta'_{AZ} + Y_2 \sin \theta'_{AZ}$$

where θ'_{AZ} is supplied by the R/D converter.

Since $\theta'_{AZ} = \text{TAN}^{-1} \frac{Y_2}{X_2}$, then

$\cos \theta'_{AZ} = \frac{X_2}{R_2}$ and $\sin \theta'_{AZ} = \frac{Y_2}{R_2}$

Substituting these values in the equation for X' gives:

$$X' = X_2\left(\frac{X_2}{R_2}\right) + Y_2\left(\frac{Y_2}{R_2}\right)$$

$$X' = \frac{X_2^2 + Y_2^2}{R_2} \quad \text{or} \quad \boxed{X' = R_2}, \text{ as } R_2^2 = X_2^2 + Y_2^2$$

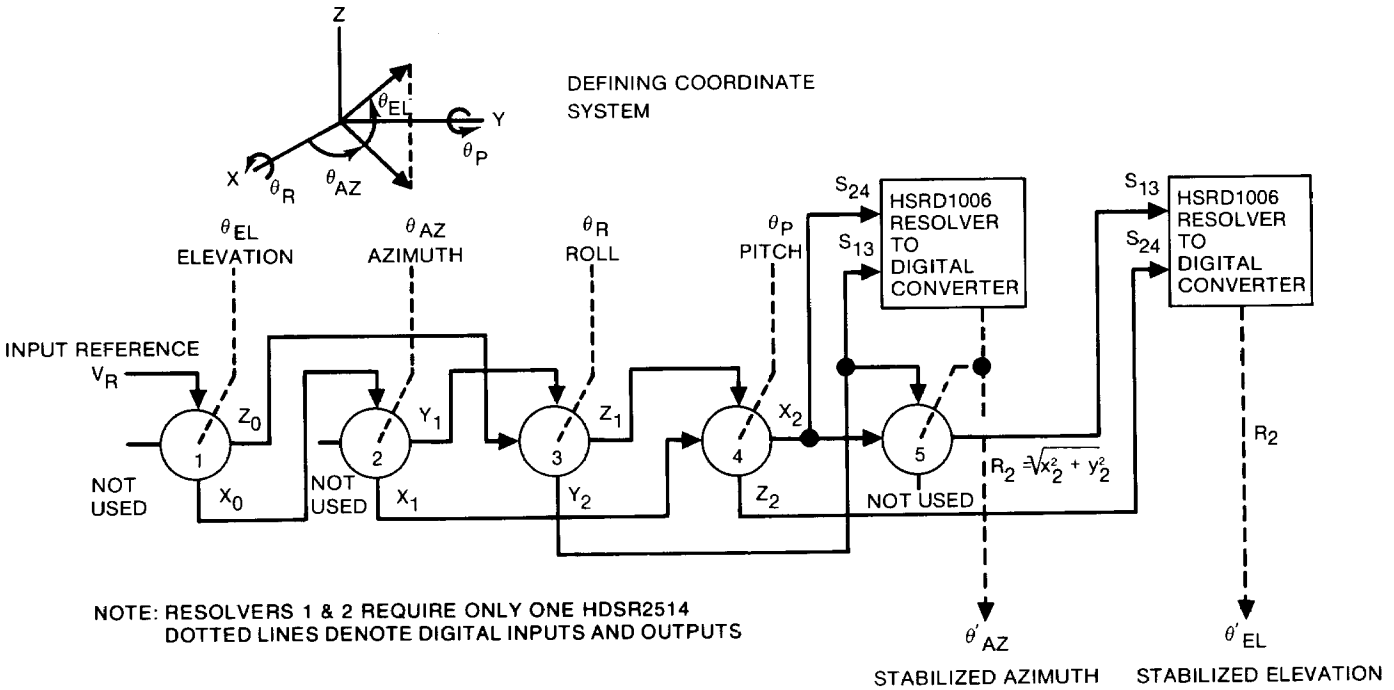

TRANSFORMATION EQUATIONS

RESOLVER 1: $X_0 = V_R \cos\theta_{EL}$, $Z_0 = V_R \sin\theta_{EL}$

RESOLVER 2: $X_1 = X_0 \cos\theta_{AZ}$, $Y_1 = X_0 \sin\theta_{AZ}$

RESOLVER 3: $Y_2 = Y_1 \cos\theta_R - Z_0 \sin\theta_R$, $Z_1 = Y_1 \sin\theta_R + Z_0 \cos\theta_R$

RESOLVER 4: $X_2 = Z_1 \sin\theta_P + X_2 \cos\theta_P$, $Z_2 = Z_1 \cos\theta_P - X_2 \sin\theta_P$

OUTPUTS

$$\theta'_{AZ} = \tan^{-1} \frac{Y_2}{X_2}$$

$$\theta'_{EL} = \tan^{-1} \frac{Z_2}{\sqrt{X_2^2 + Y_2^2}}$$

FIGURE 14 Solid State Resolver Stabilization System

Thus, an entire coordinate conversion system can be implemented with only ten hybrid converters at significantly less cost than its electromechanical counterpart and requires much less space. Added bonuses are the low power consumption and high accuracy. Since the computations are carried on continuously, significant improvement in computation time is gained over performing these complex calculations in a computer or microprocessor.

If the application requires microprocessor compatibility and/or higher resolution (16 bits) Natel model HDSR2056 may be used in place of HDSR2514.

If the application requires unity gain throughout the computation chain, then Natel model HDSC2026 may be used in place of HDSR2514. Model 2026 also provides microprocessor compatibility and 16-bit resolution for the digital angle.

Other Synchro Conversion products available from NATEL

- Two-speed logic combiner with 20-bit, 3-state output, in a 1.3 x 2.6 x .35 inch size (TSL1X36)
- 14 and 16-bit Digital to Synchro/Resolver converters, with internal power amplifiers (5101, 5112, 5116)
- High power Synchro/Resolver Drivers
- 10 to 20-bit single-speed Synchro-to-Digital converters
- Hybrid synchro converters - see page 8
- Low profile Digital-to-Synchro/Resolver converters (5001)
- Two-speed Synchro (Resolver)-to-Digital converters with 16 and 20-bit resolutions in a single package. (Models 2SD402 and 2SD412.)
- Solid State control transformers (SSCT) and differential transmitters (SCDX).
- Angle position indicators and synchro instrumentation for one-speed and multi-speed applications.

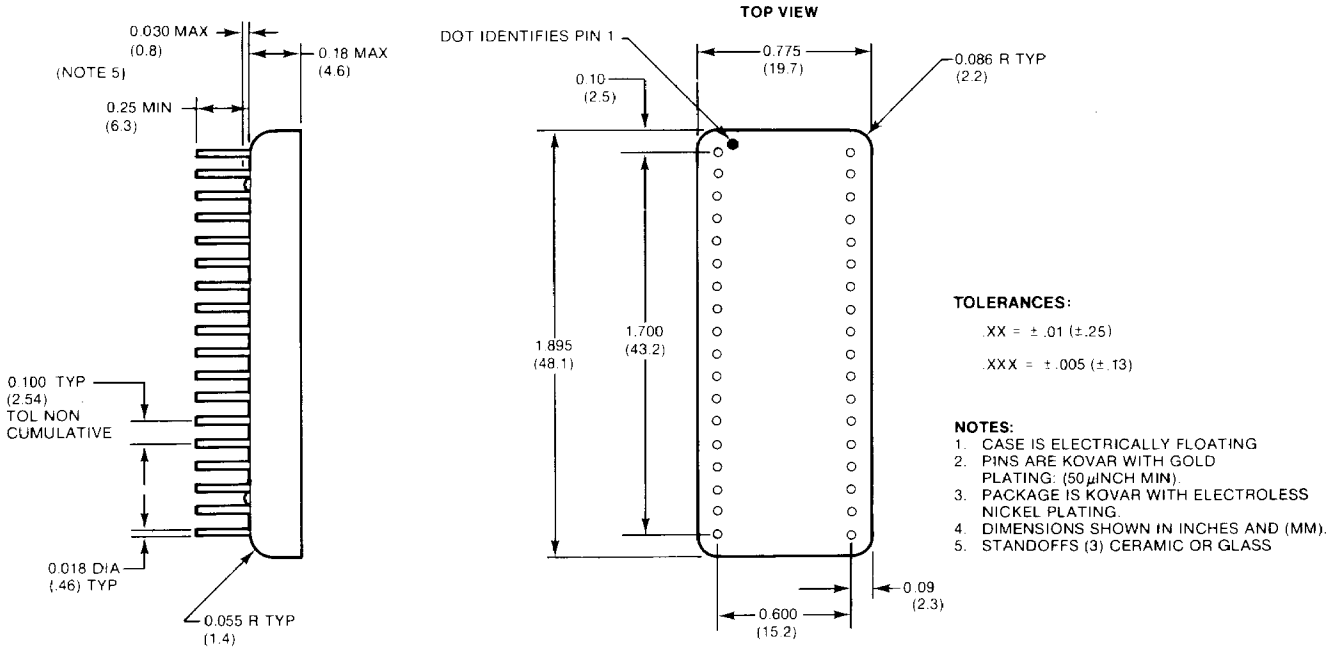

MECHANICAL OUTLINE (36 PIN DOUBLE DIP)

Ordering Information

HDSR2514 - T F A

Temperature Range
1 = 0°C to +70°C
2 = −25°C to +85°C
3 = −55°C to +125°C

Accuracy
S = ±4 arc-minutes
H = ±2 arc-minutes
V = ±1 arc-minute

Frequency Range
4 = dc to 1000 Hz
5 = dc to 5 kHz

As a standard practice, all converters are built in accordance with the requirements of MIL-STD-883B, including 168 hours of active burn-in.

Other products available from NATEL

- Hybrid (36-pin DDIP size) Synchro (Resolver)-to-Digital converters with 10 to 16-bit resolutions (1000 series)
- Second generation Four Quadrant Multiplying Sin/Cos DAC (HDSC2026)
- Low Cost Digital-to-Sin/Cos converter in a ceramic package (HDSC2306)
- 2-channel Digital-to-Sin/Cos converter in a single 36-pin hybrid (HDSC2036)
- 2 VA output, Digital-to-Resolver Converter in a 32-pin package (HDR2116)
- Resolver Control Differential Transmitter in a single 36-pin package (HCDX3106)
- 22-bit Binary-to-BCD and BCD-to-Binary converters (SBD227 and SDB724)

A wide range of applications assistance is available from Natel. Application Notes can be requested when available . . . and Natel's applications engineers are at your disposal for specific problems.

NATEL Engineering Co., Inc.

4550 Runway Street, Simi Valley, CA 93063 (USA)
Phone: (805) 581-3950 TWX: 910-494-1959

Specifications subject to change without notice.
Printed in USA Copyright © 1985 NATEL Engineering Co., Inc.