R & S SERIES

RF WIDEBAND TRANSFORMER

AS9100 CERTIFIED
ISO 9001 CERTIFIED
ITAR COMPLIANT

RoHS & XT VERSIONS AVAILABLE

MIL-PRF-27

Bandwidth (MHz)	Max Insertion Loss @ 50MHz	Impedence Ratio
0.5 to 500	0.8 to 2.0	1:1 to 1:16

MARKINGS: LASER OR INK

ELECTRICAL SPECIFICATIONS

- **Operating Temperature:** −55°C to +125°C
- **Storage Temperature:** −60°C to +130°C
- **Dielectric Withstanding Voltage:** 100 V_{AC}
- **Different electrical values available upon request**
- **Power Rating:** 100 mW
- **Outgassing TML:** <1%

FEATURES

- **Compact**, low profile, ideal for automatic placement
- Built to meet MIL-PRF-27 **(MIL-T-55631)** specifications
- **Low thermal expansion, Transfer Molded Package**
- **Terminations:** Tin-lead, Gold, RoHS
- **Welded Internal Connections**
- **Moisture, Shock and Immersion Resistant**
- **Resistance to Soldering Heat:** 265°C for 10 secs
- **Other termination finishes available**

APPLICATIONS

- Wideband Transformers
- RF Transformers

R SERIES

SCHEMATIC

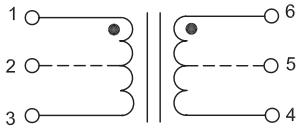

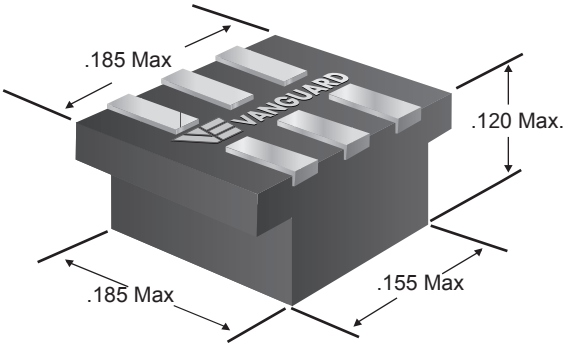

THRU-HOLE PACKAGES ALSO AVAILABLE

S SERIES

SCHEMATIC

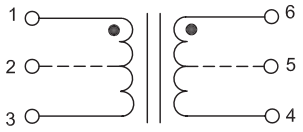

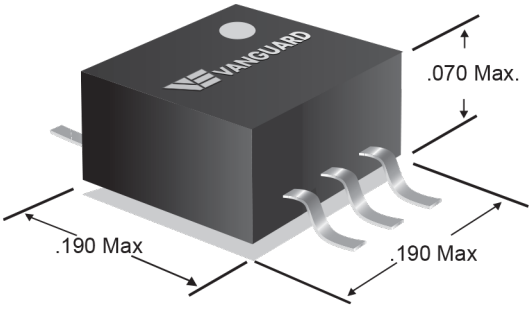

CUSTOM DESIGNS & MODIFICATIONS:

Other electrical configurations and performance characteristics are available in various sizes and package types

R & S SERIES

REV F

DATA TABLE

Vanguard P/N R SERIES	Vanguard P/N S SERIES	Impedance Ratio Pri : Sec	Primary Center Tap**	Secondary Center Tap	Insertion Loss @ 50 MHz max (dB)	VSWR @ 50 MHz max	Bandwidth min (MHz) 0.5 dB (Ripple)	Bandwidth min (MHz) 3 dB Points
RUB55D	SUB55D	1 : 1	No	Yes	1.0	1.35	6.0 - 120	1.5 - 360
RUB1010D	-	1 : 1	No	Yes	1.3	1.7	12 - 35	3 - 125
-	SUB1010D	1 : 1	No	Yes	0.8	1.35	6 - 120	1.5 - 360
RUB57D	SUB57D	1 :1.5	No	Yes	1.6	1.80	7.0 - 80	4.0 - 180
RUB510D	SUB510D	1 : 2	No	Yes	1.0	1.27	12 - 85	1.2 - 200
RUB1020D	SUB1020D	1 : 2	No	Yes	1.2	1.4	12 - 85	1.2 - 200
RUB520D	SUB520D	1 : 4	No	Yes	1.0	1.30	7.0 - 130	0.9 - 270
RUB545D	SUB545D	1: 9	No	Yes	2.0***	-	-	6 - 100
RUB580D	SUB580D	1:16	No	Yes	1.3*	2.0*	14 - 30	3.0 - 125
RUU55D	SUU55D	1 : 1	No	No	1.0	1.35	8.0 - 90	1.5 - 300
RUU57D	SUU57D	1 :1.5	No	No	1.5	1.80	9.0 - 60	6.0 - 130
RUU510D	SUU510D	1 : 2	No	No	1.4	1.50	15 - 80	1.5 - 250
RUU520	SUU520	1 : 4	No	No	1.2	1.35	8.0 - 125	1.3 - 210
RUU580D	SUU580D	1 : 16	No	No	1.3*	2.0*	16 - 25	3.0 - 100

Inductance measured at 10 kHz, 0.1 V_{RMS} *Measured at 15 MHz ***Measured at 10.7 MHz
**To design with primary center tap - contact factory.

FOR ADDITIONAL CATALOG VALUES, PLEASE SEE THE BELOW PART NUMBERING SYSTEM OR CONTACT THE FACTORY:

PART NUMBER

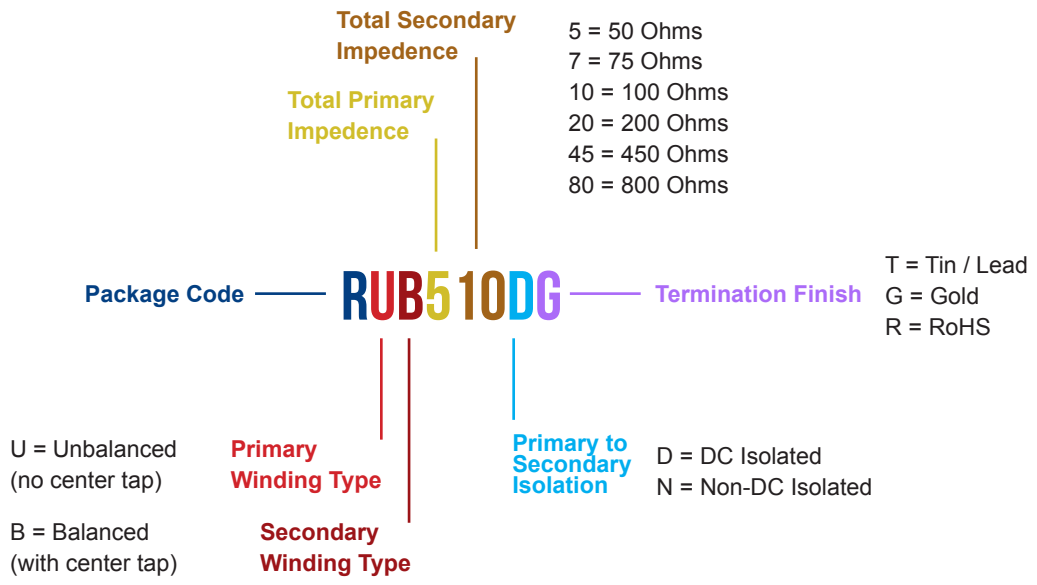

CUSTOM DESIGNS & MODIFICATIONS:

Other electrical configurations and performance characteristics are available in various sizes and package types

R & S SERIES

REV F

R SERIES

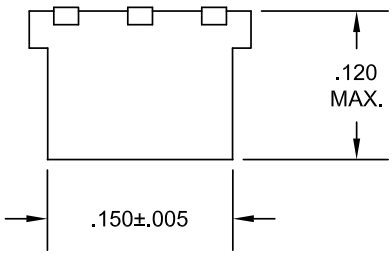

SIDE VIEW

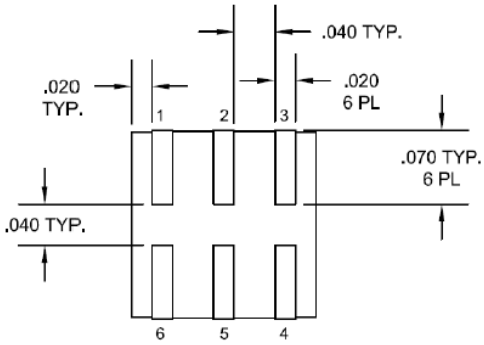

BOTTOM VIEW

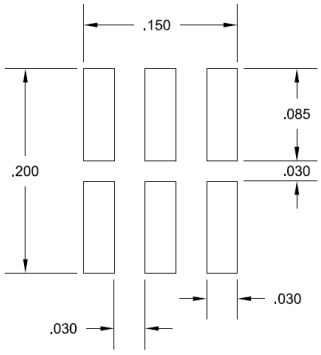

RECOMMENDED MOUNTING PAD CIRCUIT SIDE

S SERIES

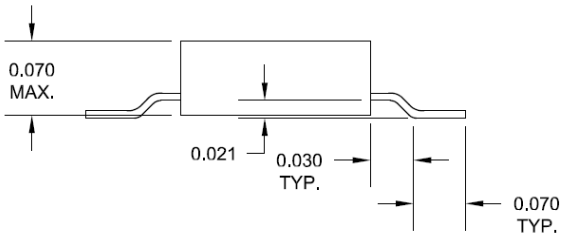

SIDE VIEW

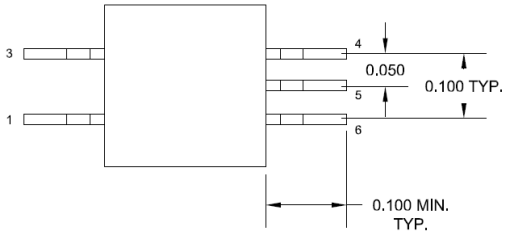

TOP VIEW

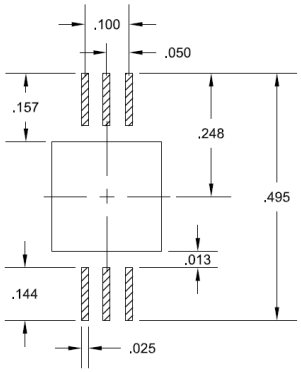

RECOMMENDED MOUNTING PAD CIRCUIT SIDE

R SERIES

DIMENSIONS : INCHES

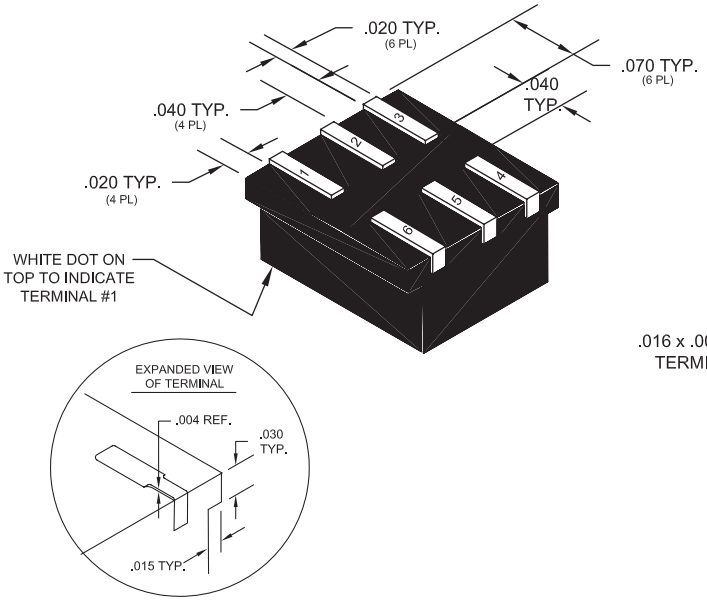

S SERIES

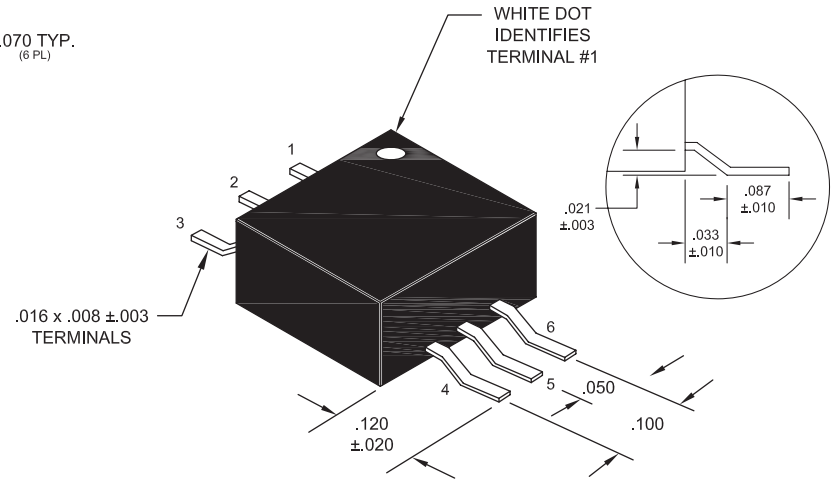

CUSTOM DESIGNS & MODIFICATIONS:

Other electrical configurations and performance characteristics are available in various sizes and package types

R & S SERIES

REV F