THIS DRAWING IS UNPUBLISHED. RELEASED FOR PUBLICATION NOV ,2006.
© COPYRIGHT 2006 BY TYCO ELECTRONICS CORPORATION. ALL RIGHTS RESERVED.

LOC	DIST
E	B

REVISIONS

P	LTR	DESCRIPTION	DATE	DWN	APVD
	B	REVISED PER ECO-09-003420	14FEB09	ANS	BOB

DIE SET	G	F	E	D	C	B	A	CABLE GROUPS	PART NO.
DIMENSIONS									
–	9.50	19.40	6.00	6.70	8.70	10.00	10.50	CT125	5-1814821-7
–	9.50	19.40	6.00	6.70	8.70	10.00	10.50	CT125	5-1814821-6
9-1478243-0	8.50	19.40	4.85	5.70	7.70	9.00	9.50	CT100	5-1814821-5
9-1478243-0	8.50	19.40	4.85	5.70	7.70	9.00	9.50	CT100	5-1814821-4
1583581-1	10.20	19.40	4.85	5.50	9.50	10.80	11.20	RG6/U	5-1814821-3
1583581-1	10.20	19.40	4.85	5.50	9.50	10.80	11.20	RG6/U	5-1814821-2
9-1478243-0	8.50	20.40	3.90	4.70	7.50	9.00	9.50	RG59B/U, 62A/U, 140/U, 210/U, URM90, Belden 9291, 9291, KX6A, KX25, KX52, KX53	5-1814821-1
9-1478243-0	8.50	20.40	3.90	4.70	7.50	9.00	9.50	RG59B/U, 62A/U, 140/U, 210/U, URM90, Belden 9291, 9291, KX6A, KX25, KX52, KX53	5-1814821-0

NOTES

1. SINGLE PACK IN ACCORDANCE WITH AMP SPEC 107-3275
2. 100 TRAY PACK IN ACCORDANCE WITH AMP SPEC 107-3275
3. Ni PLATING
4. HAND TOOL: 9-1478240-0
5. FOR TECHNICAL DATA REFER TO YOUR LOCAL TYCO ELECTRONICS SALES OFFICE
6. ALL DIMENSIONS ARE NOMINAL FOR REFERENCE ONLY UNLESS OTHERWISE STATED

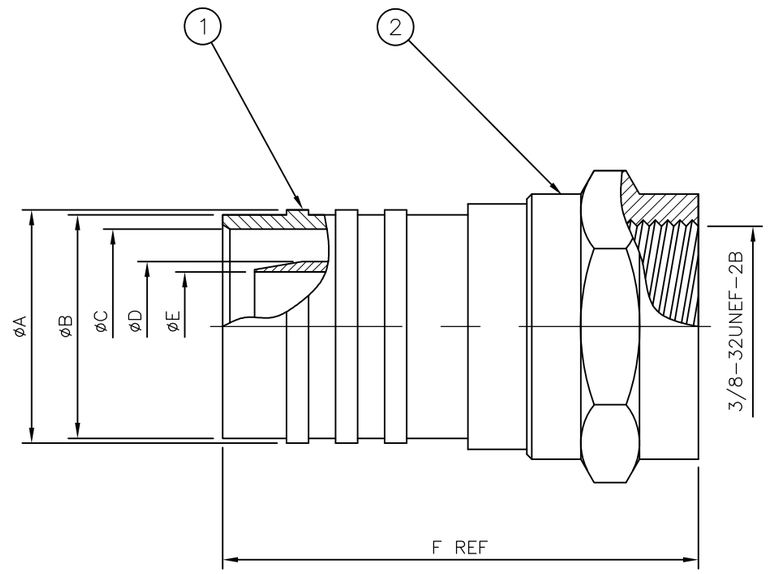

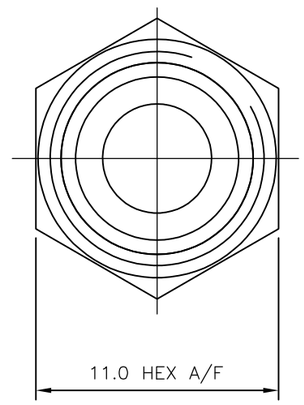

RECOMMENDED CABLE STRIPPING DIM'S

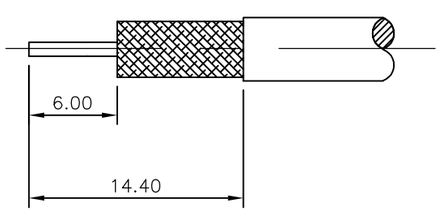

RECOMMENDED CRIMP OUTER FERRULE A/F HEX

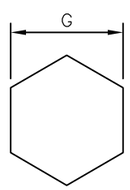

5--7	5--6	5--5	5--4	5--3	5--2	5--1	5--0	MATERIAL	DESCRIPTION	ITEM
1	1	1	1	1	1	1	1	ZINC ALLOY (3)	COUPLING NUT	2
1	1	1	1	1	1	1	1	BRASS (3)	BODY	1
(2)	(1)	(1)	(2)	(2)	(1)	(1)	(2)			
QUANTITY PER ASSY								PARTS LIST		

THIS DRAWING IS A CONTROLLED DOCUMENT.

DIMENSIONS: mm

TOLERANCES UNLESS OTHERWISE SPECIFIED:
0 PLC ± 0.5
1 PLC ± 0.4
2 PLC ± 0.3
3 PLC ± –
4 PLC ± –
ANGLES ± –

MATERIAL: SEE TABLE

FINISH: –

DWN ANSON MA 14FEB09
CHK RITA ZUO 14FEB09
APVD BOB ZHAO 14FEB09
PRODUCT SPEC 108-112000
APPLICATION SPEC –
WEIGHT –

Tyco Electronics
Tyco Electronics Corporation
Kunshan,Jiangsu,China,215312

NAME: F TYPE STR PLG HEX
–
–

SIZE	CAGE CODE	DRAWING NO	RESTRICTED TO
A3	00779	C-1814821	–

CUSTOMER DRAWING

SCALE NTS | SHEET 1 OF 1 | REV B