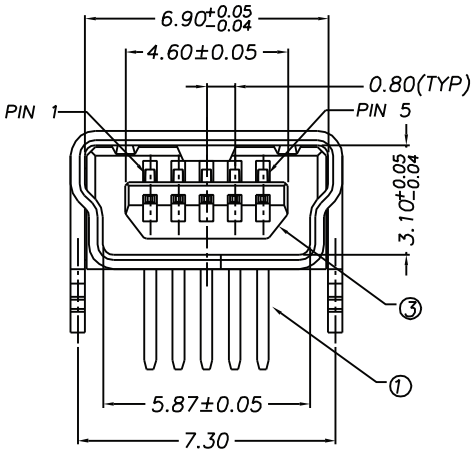

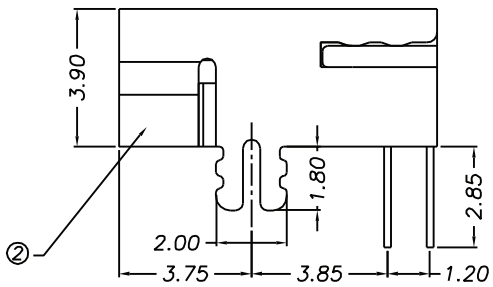

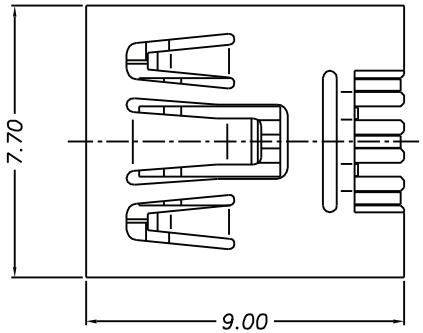

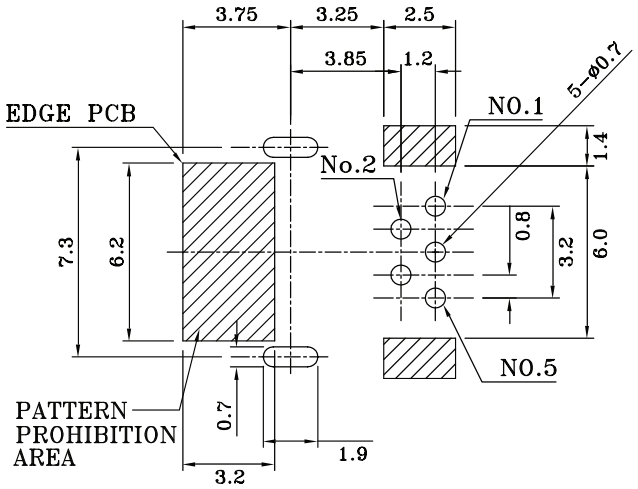

RECOMMENDED PCB PATTERN LAYOUT
(PCB THICKNESS: (1.4 ~ 1.6mm)

ELECTRICAL:
CURRENT RATING: 0.5A
CONTACT RESISTANCE:
< 30 Milliohm Max.
INSULATION RESISTANCE:
> 1000 Mgeaohm Min.
DIELETRIC WITHSTANDING VOLTAGE:
750V (rms) AC for 1 Minute
OPERATING TEMPERATURE: -55° C to +125° C

MATERIAL:
INSULATOR: Thermoplastic UL94V-0
CONTACTS: Phosphor Bronze
CONTACT PLATING:
Gold Plating over Nickel on Contact Area,
Tin Plating on Terminal
SHELL: Copper Alloy
SHELL PLATING: Nickel

HOW TO ORDER:

U 0 0 3 - T 6 5 0 - 2 2 X - Z X

CIRCUIT SIZES
06 - 5 Position Female - Thru Hole

BODY STYLE
5 - 7.8(W) x 9.0 (L) Footprint

INSULATOR COLOR
0 - Black

MOUNTING STYLE
2 - No Mounting Pegs

SELECTIVE CONTACT PLATING
2 - Selective Gold
3 - 15u" Gold
4 - 30u" Gold

RoHS COMPLIANT

PACKAGING
Blank - T/R
1- Tray
2- Tube

Rev		Drawn	Checked	Approved	Date
0	Issued	B.S.	S.M.	S.M.	1/25/07

SCALE:n/a

TOL. DEC. .X +/- 0.30 .XX +/- 0.30 .XXX +/- 0.30 ANGLE +/- 3° UNIT: mm

SMP TECHNOLOGY, INC.

Mini USB, 5 Position, Right Angle Female, Thru Hole
PC Tail for 1.4~1.6mm PCB , 7.8 x 9.0 Profile

P/N: U003-T650-22X-ZX