File No.	191	SHEET	1/1

SPECIFICATIONS

①④⑦ Brass/3u" Gold Plated
② Copper/30u" Gold Plated
③ Teflon
⑤ Beryllium Copper
⑥ Silicon Rubber
⑧ Shrink Plastics

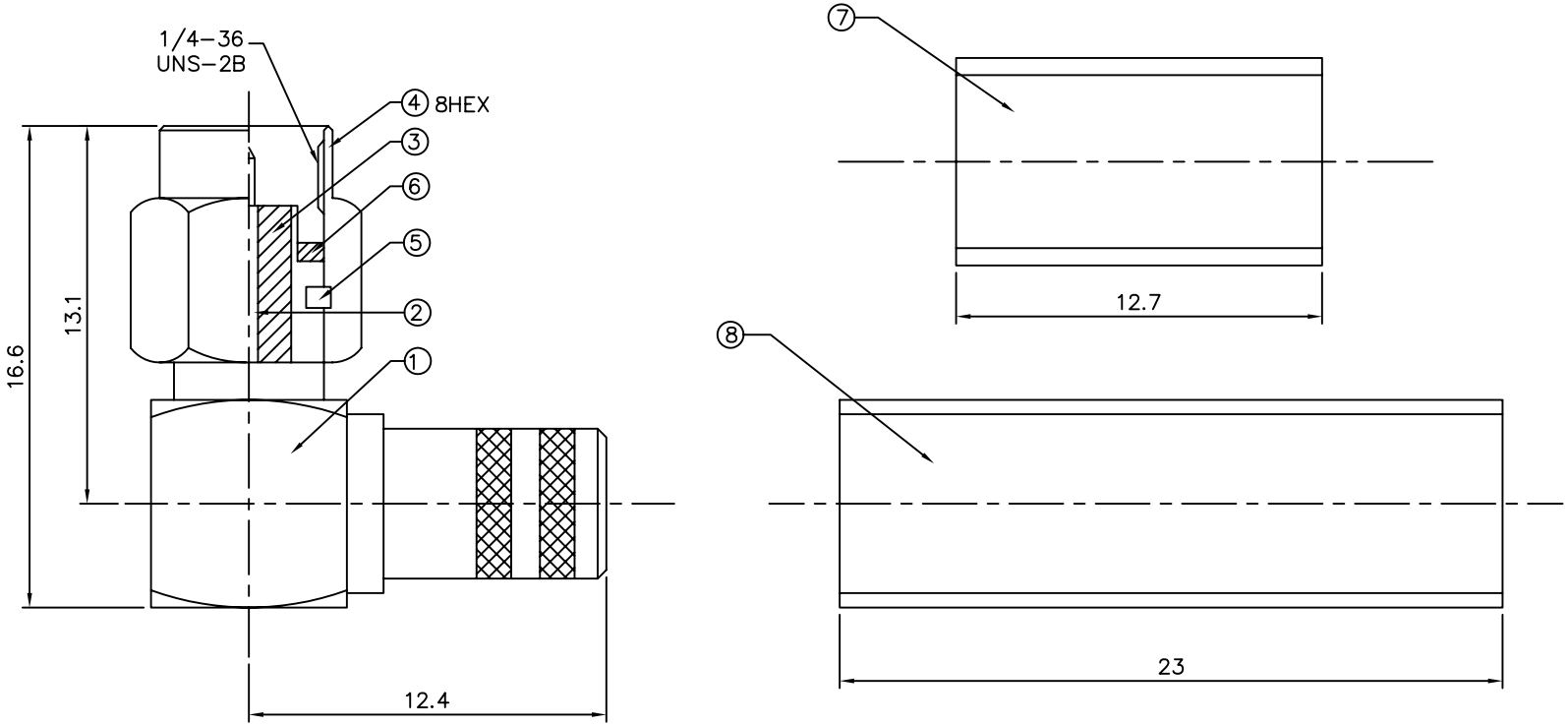

A MEMBER OF AUK GROUP
太聯事業股份有限公司
AUK CONTRACTORS CO., LTD.

CATEGORY		APPROVED BY	MEI
PART No.	SMA-PCR5850	CHECKED BY	SHIN
DRAWING No.	SMA-PCR5850	DRAWING BY	HZF
SCALE	NONE	REV.	A0

UNLESS OTHERWISE SPECIFIED TOLERANCES ARE
X. ±0.5
.X ±0.3
.XX ±0.2
UNIT mm

NO.	REV.	REVISIONS	CHK	DATE
0	A0	NEW RELEASE	SHIN	01/25/2006