REV	DATE	DESCRIPTION	ECO	BY	C'H'K.
A	12/07/2018	NEW DRAWING CREATION	50468	PP	VS

WIRE SIZE (AWG), AN Aircraft	CATALOG NUMBER	BULK CATALOG NUMBER	L MAX.	WIRE STRIP LENGTH ± .03 [± .8]	DIE INDEX
8 Str.	YSV8CLBOX	YSV8CL	1.04 [26.3]	7/16" [11.1]	38
6 Str.	YSV6CLBOX	YSV6CL	1.16 [29.3]	5/8" [15.9]	39
4 Str.	YSV4CLBOX	YSV4CL			40
2 Str.	YSV2CLBOX	YSV2CL	1.44 [36.6]		41
1 Str.	YSV1CLBOX	YSV1CL	1.50 [38.0]		42
1/0 Str.	YSV25LBOX	YSV25L	1.57 [39.8]	11/16" [17.5]	43
2/0 Str.	YSV26LBOX	YSV26L	1.82 [46.1]	13/16" [20.6]	44
3/0 Str.	YSV27LBOX	YSV27L	1.85 [46.9]		45
4/0 Str.	YSV28LBOX	YSV28L	1.98 [50.2]	7/8" [22.2]	46

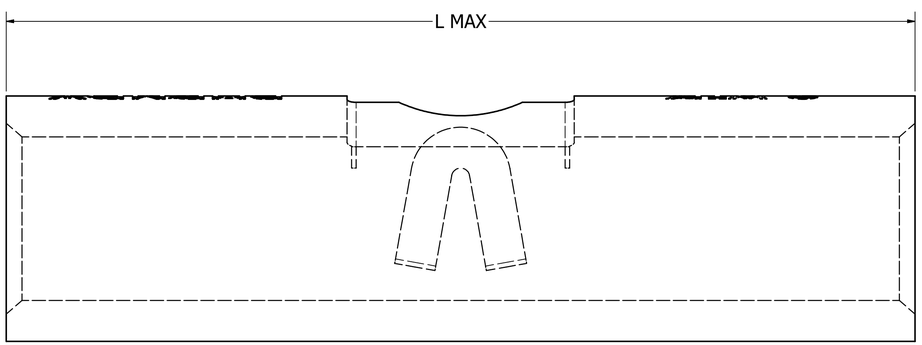

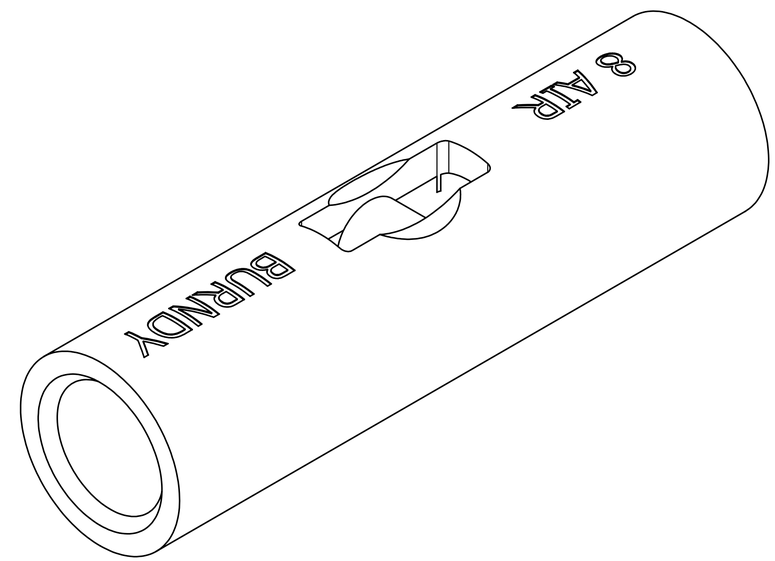

NOTES:

1. TERMINAL: TIN PLATED COPPER
2. DIMENSIONS IN BRACKETS [ ] ARE IN MILLIMETERS AND ARE FOR REFERENCE ONLY.
3. UL LISTED & CSA CERTIFIED SPLICING WIRE CONNECTORS PER UL486C (FILE E9498) & CSA C22.2 NO.188 REQUIREMENTS (FILE 42860)

TO ORDER BURNDY® PRODUCTS CALL

UNITED STATES
1-800-346-4175 (LONDONDERRY, NH)

CANADA:
1-800-361-6975 (QUEBEC)
1-800-387-6487 (ALL OTHER PROVINCES)

FOR PRODUCT INFO: http://www.burndy.com

HYLINK

ITEM NO: N/A

CAT. NO: TYPE YSV-L

DRAWN BY:	P.PRASANTH	12/5/2018
CHECKER:	V.SAKTHIVEL	12/5/2018
DSN APRVL:	K.CASTONGAUAY	12/14/2018
MFG APRVL:	--	
QA APRVL:	B.POST	12/11/2018
MKT APRVL:	M.BAILLY	12/10/2018
PROD FAM:	--	
PROJECT #:	--	
DOCUMENT TYPE:	SALES	
REL LEVEL:	Released	

BURNDY®

SIZE: D

DRAWING NO: 50094198

REV: A

SHEET 1 OF 1